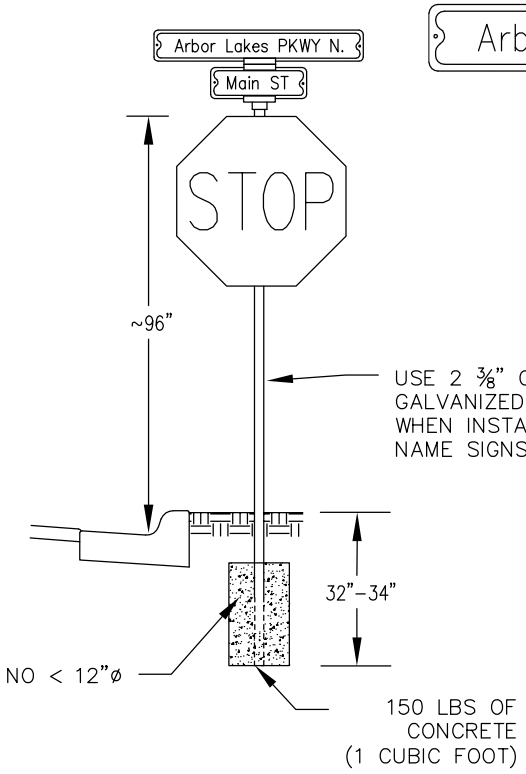


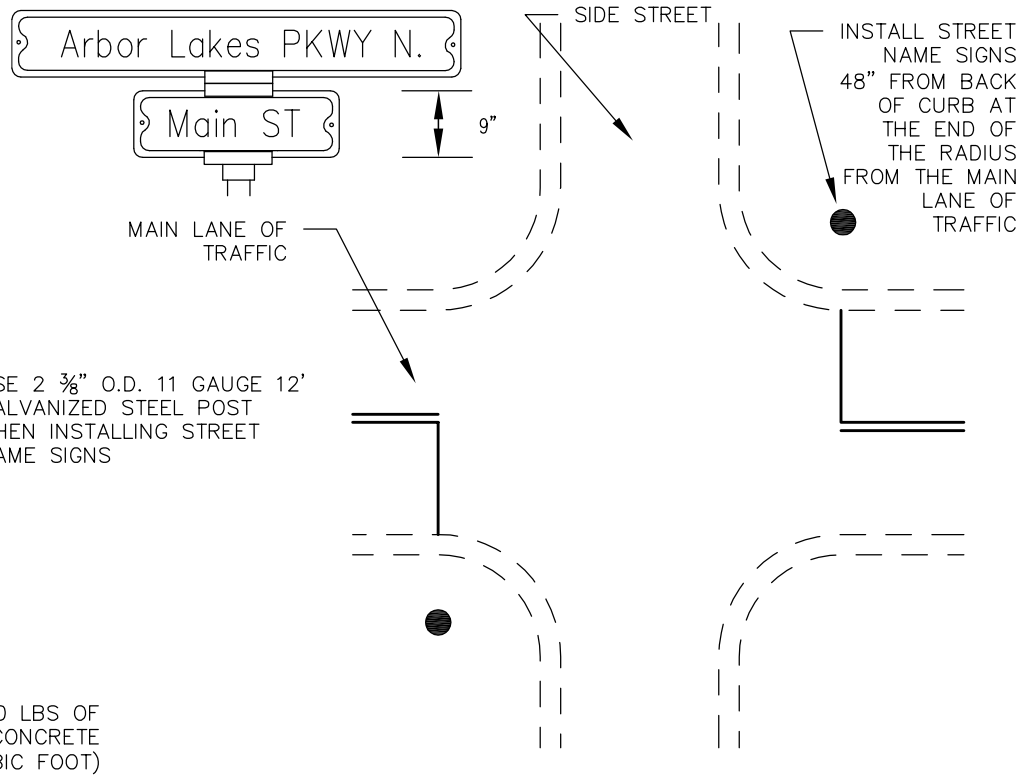


- BLADE SPECIFICATION – 9xL,S/F,DG3/080,WG,E450,E450,63SP,UL
- LETTER SIZE – 6" UPPER CASE 4" LOWER CASE
- 3M DIAMOND GRADE DG3 REFLECTIVE SHEETING
- WHITE ON MNDOT GREEN BACKGROUND FOR PUBLIC STREETS
- WHITE ON MNDOT BROWN BACKGROUND FOR PRIVATE STREETS
- STREET NAMES SHALL BE SPELLED COMPLETELY EXCEPT FOR SUFFIXES (Ave, La, Ct, Cir, Pkwy, St, Pl, Dr) WHICH MAY BE ABBREVIATED ON LONGER STREET NAMES
- FIRST LETTER OF EACH WORD TO BE "CAPITAL" LETTERS; REMAINING LETTERS OF EACH WORD TO BE LOWER CASE
- MAXIMUM OF 2 STREET NAME BLADES PER POLE, IF MORE STREET NAME BLADES ARE REQUIRED. CONTRACTOR WILL NEED TO INSTALL ANOTHER POLE ON OPPOSITE CORNER
- ALWAYS INSTALL THE CROSS STREET NAME BLADE ON THE BOTTOM

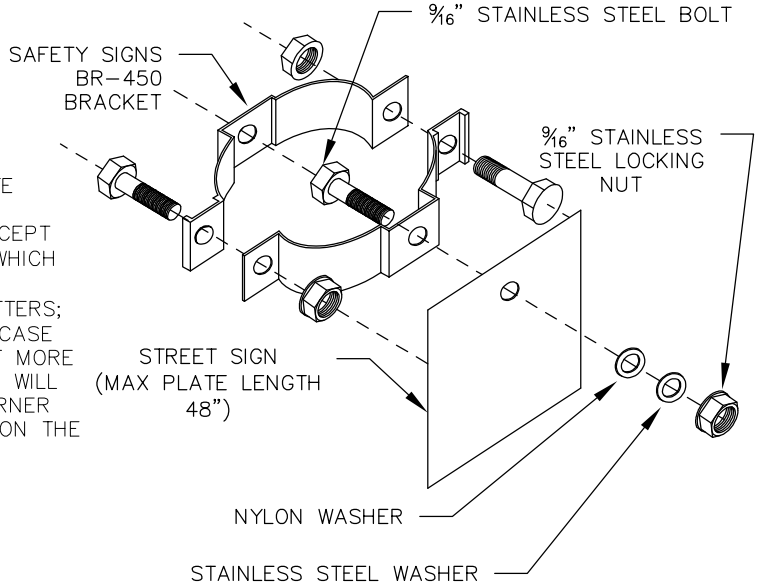


NOTES:

ALL REGULATORY AND STREET SIGNS MUST BE MAINTAINED THROUGHOUT CONSTRUCTION. TEMPORARY SIGNAGE MAY BE REQUIRED AND IS CONSIDERED INCIDENTAL.

ALL IN-PLACE SIGNS NOT SHOWN IN PLANS SHALL BE MAINTAINED IN-PLACE THROUGHOUT CONSTRUCTION, UNLESS OTHERWISE DIRECTED BY THE ENGINEER.

LOCATION OF ALL PROPOSED SIGNS ARE APPROXIMATE AND SHALL BE LOCATED BY THE ENGINEER IN THE FIELD PRIOR TO INSTALLATION.

SIGN PANELS-REFLECTIVE SHEETING WILL BE DG3 MATERIAL.

ALL TYPE C SIGN PANELS SHALL BE SUPPLIED AND INSTALLED BY THE CONTRACTOR. THE CONTRACTOR SHALL PROVIDE THE SIGN, SIGN POST, MOUNTING HARDWARE, SIGN AND LABOR FOR THE INSTALLATION OF ALL TYPE C SIGNS.

WHEN CONTRACTOR IS INSTALLING TYPE C SIGNS THEY MUST USE A BR-450 DOUBLE-SIDED SIGN BRACKET FROM SAFETY SIGNS (OR APPROVED EQUAL)

A SIGN PLAN SHOWING SIGN COLORS, SIZES AND LETTERING MUST BE SUBMITTED TO THE CITY OF MAPLE GROVE ENGINEERING DEPARTMENT FOR REVIEW AND APPROVAL PRIOR TO SIGN INSTALLATION.

| | | |
|---|---|---|
| City of Maple Grove | STREET NAME BLADE INSTALLATION W/ TRAFFIC SIGN | STANDARD PLATE # SGN-2 |
| LAST REVISION JANUARY 2016 | CITY OF MAPLE GROVE ENGINEERING & PUBLIC WORKS DEPARTMENTS | |