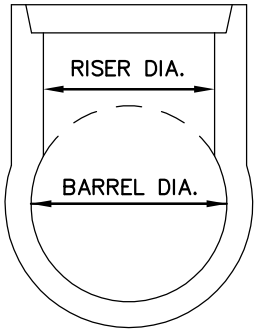

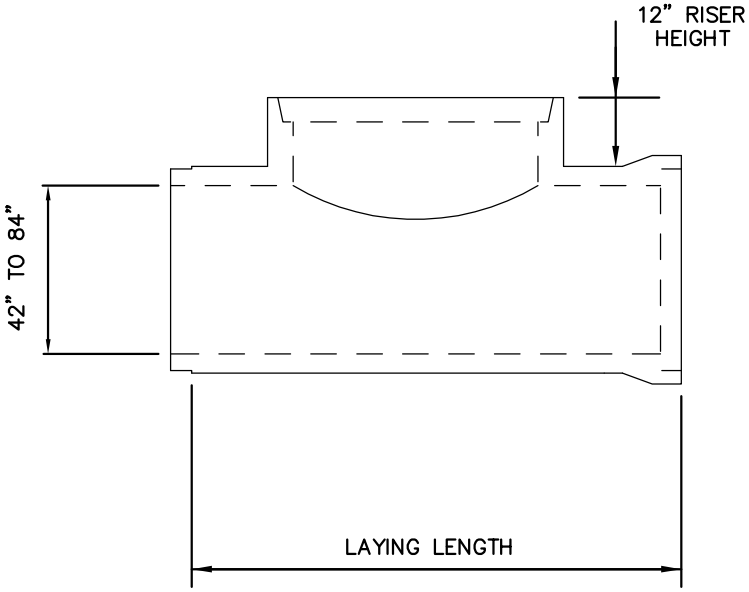

DIAMETER OF RISER INCHES	DIAMETER OF BARREL INCHES
48	42
48	48
48	54
48	60
48	66
48	72
48	78
48	84

City of Maple Grove

LAST REVISION
NOVEMBER 2014

MINI-TEE SECTION MANHOLE

CITY OF MAPLE GROVE ENGINEERING
& PUBLIC WORKS DEPARTMENTS

STANDARD PLATE # SS-6