CITY OF MAPLE GROVE
12800 ARBOR LAKES PARKWAY
P. O. BOX 1180
MAPLE GROVE MN 55311-6180
763-494-6040

Office Use Only:

CASE #_____

PLANNER:

_____

NON-RESIDENTIAL PLANNED UNIT DEVELOPMENT APPLICATION

_____A) Concept Plan _____B) Development Stage Plan _____C) Both A & B

Name of Project _____

Description of Project _____

_____

PID#'s: _____
Address and Legal Description: _____

OWNER: _____

CONTACT NAME (PRINT): _____ **PHONE:**_____

ADDRESS: _____ **FAX:**_____

CITY/ZIP: _____ **E-MAIL:**_____

APPLICANT: _____

CONTACT NAME (PRINT): _____ **PHONE:**_____

ADDRESS: _____ **FAX:**_____

CITY/ZIP: _____ **E-MAIL:**_____

The following information is submitted in support of the application:

_____1) Completed Application for Planned Unit Development (Submission Deadline Dates FIRM)
_____2) Application fee:

Concept Stage Plan:	**$500 plus**	**$20 acre**
Development Stage Plan:	**$500 plus**	**$50 per acre**
If Rezoning	**$350.00 plus $20.00 per acre** (maximum fee of $650.00) plus escrow to cover costs of environmental and pollution studies the city may undertake itself or require of the applicant prior to final council approval.	
If Final Plat	**$100.00** plus escrow for attorney and engineering expenses	

_____3) Legal description of the property
_____4) Narrative of Project
_____5) Completed Acknowledgement of Responsibility form
_____6) Completed Affirmation of Sufficient Interest form
_____7) Completed Application to appropriate Watershed District
_____8) Names and addresses of property owners within 500' of subdivision requested, certified by the Auditor of Hennepin County (mail letter to Hennepin County Government Center **OR** order by phone 612-348-5910)
_____9) Blue line copies of the following:
____a) 15 folded copies - Concept Plan – Refer to PUD Requirement Sheet
____b) 15 folded copies - Dvlpt Stage Plan: Refer to PUD Requirement Sheet
____10) One (1) set (8½" × 11") paper copy of all documents listed in #9 above (not stapled).
____11) Fourteen (14) sets (11" × 17") paper copies of all document listed in #9 above (not stapled).

____12) One USB Flash Drive in .DXF **AND** .PDF format using the Hennepin County coordinate system for **ALL MAPS** listed in #9 above.

____13) One USB Flash Drive in .DXF **AND** .PDF format using the Hennepin County coordinate system for just **FINAL PLAT ONLY** listed in #9 above.

____14) Info required on attached Hennepin County Preliminary Plat/Development Review Process pamphlet dated January 2010

*** PLEASE NOTE: Prior to release of the final plat by the City, a registered property abstract (for Torrens property) or an updated certified abstract of title (for abstract property) must be submitted per State Statute, Title Commitments cannot be accepted to fulfill title submittal requirements.**

***The 2015 rate for City sewer and water connection charges for commercial, industrial and institutional properties are $11,580 per acre ($2,640 sewer / $8,940 water). SAC - $2,485/unit. These fees must be paid at the time building permit is issued. Please contact Becky Roy at 763-494-6062 if you have questions.**

I fully understand that all of the above required information must be submitted at least 28 days prior to a Planning Commission meeting to ensure review by the Planning Commission on that date.

_____	_____	_____
Applicant's Signature	**Printed Name**	**Date**

ACKNOWLEDGEMENT OF RESPONSIBILITY

This is to certify that I am making application for the described action by the City and that I am responsible for complying with all City requirements with regard to this request. This application should be processed in my name and I am the party whom the City should contact regarding any matter pertaining to this application.

I have read and understand the instructions supplied for processing this application. The documents and/or information I have submitted are true and correct to the best of my knowledge. I will keep myself informed of the deadlines for submission of material and of the progress of this application.

I understand that this application may be reviewed by City staff and consultants. I further understand that additional information, including, but not limited to, traffic analysis and expert testimony may be required for review of this application. I agree to pay to the City upon demand, expenses, determined by the City, that the City incurs in reviewing this application and shall provide an escrow deposit to the City in an amount to be determined by the City. Said expenses shall include, but are not limited to, staff time, engineering, legal expenses and other consultant expenses.

I agree to allow access by City personnel to the property for purposed of review of my application and to erect a temporary sign indicating the application proposed.

Signature of applicant _____ Date_____

Name of applicant _____ Phone_____
(Please Print)

Name and address of Contact (if other than applicant) _____

_____

_____

_____

_____

_____ _____
Phone Number **Date**

AFFIRMATION OF SUFFICIENT INTEREST

I hereby affirm that **I am the fee title owner** of the below described property or that I have written authorization from the owner to pursue the described action.

Name of applicant _____
(Please Print)

Street address/legal description of subject property _____

_____

_____

_____

_____

_____ _____
Signature **Date**

If you are not the fee owner, attach another copy of this form which has been completed by the fee owner or a copy of your authorization to pursue this action.

If a corporation is fee title holder, attach a copy of the resolution of the Board of Directors authorizing this action.

If a joint venture or partnership is the fee owner, attach a copy of agreement authorizing this action on behalf of the joint venture or partnership.

APPLICANT - To receive names & addresses of property owners within 500' of the applicant address, please <u>mail a copy of this letter to the Hennepin County Government Center or you may order by phone by calling 612-348-5910</u>.

Date: _____

Property Id and Platting Unit
A-500 Government Center
300 South 6th Street
Minneapolis, MN 55478-0055

Dear Property ID/Platting:

Please prepare a certified list of the names and addresses of the owners of all properties located within **<u>500 feet</u>** of the following property:

Street Address _____

_____

Legal Description_____

_____

I understand the fee will be $1.25 per parcel/<u>$25.00 minimum/$250.00 maximum</u>. Please notify me when the list is complete and what the total fee is at:

_____

(Applicant's Name & Daytime Phone Number)

Hennepin County: After receiving payment for the list, please mail labels to:

_____

_____

_____

Sincerely,

_____

(Name of Applicant)

Data Required for Subdivisions / Planned Unit Developments
(This is a staff generated list of all the required information for PUD's and Subdivisions. In essence it is all the requirements listed in the various parts of our code in one spot.)

1. **Narrative and Overview**

   a. A written statement generally describing the proposed subdivision / PUD and the market which it is intended to serve, its relationship to the city's comprehensive plan, and how the proposed subdivision / PUD is to be designed, arranged and operated in order to permit the development and use of neighboring property in accordance with the applicable regulations of the city.

   b. A written statement describing the city goals to be accomplished by the subdivision / PUD and the way the development accomplishes them. The statement shall also explain why the subdivision / PUD serves better than the zoning standards in meeting the city's goals.

   c. When the proposed subdivision / PUD includes provisions for public or common open space or service facilities, a statement describing the provision that is to be made for the care and maintenance of such open space or service facilities. If it is proposed that such open space be owned and/or maintained by a homeowners' association, copies of the proposed articles of incorporation and bylaws of such association shall be submitted.

   d. Proposed covenants or other agreements to satisfy the Unit Scale criteria of the Project Points System for residential projects.

2. **General requirements sheet:**

   a. Proposed name of the subdivision/PUD. Names shall not duplicate or too closely resemble names of existing subdivisions within the county.

   b. Location of boundary lines in relation to a known section, quarter section or quarter-quarter section line comprising a legal description of the property.

   c. The names and addresses of all professional consultants who have contributed to the development of the Subdivision / PUD plan being submitted, including the attorney, land planner, engineer and surveyor.

   d. Graphic scale of plat, not less than one inch to 100 feet.

   e. Date and north arrow.

3. **Existing Conditions Sheet #1**

   a. A map depicting the existing zoning category and present use of the subject

property and all land within 1,000 feet thereof and showing the precise location of existing streets and property lines.

4. **Existing Conditions Sheet #2**:

   a. Boundary line of the proposed subdivision/PUD, clearly indicated.

   b. Existing zoning classifications for land within and abutting the subdivision/PUD

   c. Location, dimensions, names and types of any and all existing or previously platted streets or other public ways, railroad and utility rights-of-way, parks and other public open spaces, permanent buildings and structures, easements, sections and district boundaries of taxing, fire, watershed, school, governmental and other such authorities having jurisdiction within the tract and to a distance of 200 feet beyond the tract.

   d. Location and size of existing sewers, water mains, culverts or other underground facilities within the tract and to a distance of 200 feet beyond the tract. Such data as grades, invert elevations, and locations of catchbasins, manholes and hydrants shall also be shown.

   e. Boundary lines of adjoining unsubdivided land, within 200 feet, identified by name and ownership, including all contiguous land owned or controlled by the applicant. Where the applicant owns property adjacent to that which is being proposed for the subdivision, the applicant shall submit a sketch plan of the remainder of the property as to show the possible relationships between the proposed subdivision and future adjacent subdivision.

   f. Topographic data within the site and to a distance of 50 feet beyond, including contours at vertical intervals of not more than two feet. Watercourses, marshes, rock outcrops, power transmission poles and lines, and other significant features shall also be shown. USGS datum shall be used for all topographic mapping where feasible.

   g. Slope analysis shall be included.

   h. Vistas and significant views.

   i. Location, dimensions, and other identifying characteristics of any and all historical, archeological, cultural and human burial sites located within and to a distance of 200 feet beyond the applicant's tract, including, but not limited to, Native American burial sites that may be identified.

   j. The information required pursuant to section 36-697.

5. **Preliminary Plat:**

   a. Layout, numbers, lot areas, and preliminary dimensions of lots and blocks shall be shown.

b. Minimum building setback lines as required in chapter 36 shall be shown

c. When lots are located on a curve, the width of the lot at the building setback line shall be shown

d. Any area, other than streets, alleys, pedestrian ways and utility easements, intended to be dedicated or reserved for public use, including the acreage of each such area, shall be shown

e. Layout of proposed streets showing right-of-way widths, centerline gradients, typical cross sections, and proposed names of streets in conformance with all applicable city ordinances and policies shall be shown. Street names shall be assigned in accordance with chapter 28, article III.

f. Locations and widths of proposed alleys and pedestrian ways shall be shown.

g. A table showing minimum lot size, minimum lot width, average lot size, and average lot width for residential projects.

h. A table showing the size and width of all proposed lots for residential developments.

i. All existing and proposed wetlands with appropriate wetland buffers

j. All proposed storm ponds

k. All existing and proposed utility easements

l. Where structures are to be placed on large or deep lots which are subject to potential replat, the applicant should consider the placement of structures so that lots could be further subdivided. A sketch plan that illustrates a way in which the lots could possibly be resubdivided may be submitted for review and non-binding comment by the city.

6. Proposed Design Features Sheet (Site Plan):

a. A statement of the estimated total number of dwelling units proposed for a residential or mixed use development and a tabulation of the proposed approximate allocations of land use expressed in acres and as a percent of the total project area, which shall include at least the following:

    a. Area devoted to residential uses.
    b. Area devoted to residential use by building type.
    c. Area devoted to common open space.
    d. Area devoted to public open space.
    e. Approximate area devoted to streets.
    f. Approximate area, and floor area, devoted to commercial uses.
    g. Approximate area, and floor area, devoted to industrial or office use

b. Locations of all proposed buildings

c. Locations of all sidewalks, trails, or other hard surfaces

d. Minimum building setback lines as required in chapter 36 shall be shown.

e. Locations of trash receptacles

f. Any other details necessary to tell the story of the development.

7. Grading and Drainage Plan:

a. Existing and proposed contours

b. Proposed building locations, lot lines, parking lot features, roads, sidewalks, etc…

c. Provision for surface water disposal, drainage, and flood control that complies with applicable ordinances, statutes and governmental regulations shall be included.

d. A plan for soil erosion and sediment control both during construction and after development has been completed shall be included. The plan shall include gradients of waterways, design of velocity and erosion control measures, landscaping of the erosion and sediment control system and stabilization of disturbed areas, and the plan shall be in conformance with chapter 14, article IV

8. Utility Plan:

a. Locations of proposed sanitary and storm sewer lines and water mains shall be shown.

b. Water mains shall be provided to serve the subdivision by extension of an existing community system wherever feasible. Service connections shall be stubbed into the property line and all necessary fire hydrants shall also be provided. Extensions of the public water supply system shall be designed so as to provide public water in accordance with the standards of the city as contained in the Maple Grove Water Supply and Distribution Report, as amended.

c. Sanitary sewer mains and service connections shall be installed in accordance with the city's comprehensive sewer plan, as amended.

9. Landscape plan

a. For multi-family / attached unit or commercial, office, or industrial projects a landscape plan shall be submitted. Landscape plans shall be prepared by a landscape architect or other qualified individual acceptable to the department of community development. Landscape plans shall be drawn to a scale of not less than one inch equal to 50 feet and shall include the following information:

(1) Location, approximate size and common name of existing trees and

shrubs.

(2) Planting schedule containing:
   i. Symbols.
   ii. Quantities.
   iii. Common names and botanical names.
   iv. Size of plant materials.
   v. Root condition (balled and burlapped, bare root, container, etc.).
   vi. Special planting instructions.

(3) Planting details illustrating proposed locations of all new plant material.

(4) Locations and details of other landscape features, including, but not limited to, berms, fences and planter boxes.

(5) Location and details of irrigation systems.

(6) Impervious surface analysis showing the % of the property that is impervious

(7) Details and cross sections of all required screening.

(8) Such other information as the city may require.

b. *Minimum requirements.* All areas of a lot which are not used or improved for buildings, parking areas, driveways or storage areas shall be landscaped with a combination of overstory trees, understory trees, shrubs, ground cover and flowers.

(1) *Minimum number of overstory trees.* The minimum number of overstory trees on a lot shall be the figure determined by dividing by 40 the number of feet in the perimeter of the lot. Overstory trees include, but are not limited to, those listed in Extension Folder 298-1974, published by the Agricultural Extension Service of the University of Minnesota, except those listed as "Trees--Small--under 25 feet."

(2) *Understory trees and shrubs.* In addition to the required number of overstory trees, a full complement of understory trees and shrubs such as, but not limited to, those listed as "Trees--Small--under 25 feet" in Extension Folder 298-1974, published by the Agricultural Extension Service of the University of Minnesota, shall be provided as determined by the city council so as to complete a quality landscape treatment of the site.

(3) *Minimum size and root condition of required overstory trees.*
   i. The trunks of deciduous trees shall be at least 1 1/2 inches in diameter breast height.
   ii. Coniferous trees shall be at least five feet in height.
   iii. All plant materials shall meet minimum standards as stated in the American Association of Nurserymen Publication No. ANSI Z60.1-

1980, entitled "American Standard for Nursery Stock."

(4) *Species.*

i. Trees which are considered as half trees, small upright trees, small spreading trees, shrubs, understory trees or ornamental trees shall not be included in the count of required overstory trees.
ii. Not more than 20 percent of the required number of overstory trees shall be composed of one species.
iii. No required overstory trees shall include:
    1. Any species of the genus Ulmus (elm), except that such species may be allowed if proof, acceptable to the city, is submitted showing that the proposed trees are resistant to Dutch elm disease. Such proof shall originate from, or be supplied by, a nursery approved by the department of community development or a college or university conducting research on Dutch elm disease, or an equivalent source.
    2. Box elder (Acer negundo), Ash (any tree of the genus Fraxinus), Amur maple (Acer ginnala), Norway maple (Acer platanoides), Russian olive (Elaegnus angustifolia), Black locust (Robinia pseudoacacia), female Ginko (Gingko biloba).

iv. No shrub shall include:
    1. Japanese barberry (Berberis thungbergii), Siberian peashrub (Caragana arborescens), Tatarian honeysuckle (Lonicera tatarica), Common buckthorn (Rhamnus cathartica(, Glossy buckthorn (Rhamnus frangula).
v. All plant materials shall be indigenous to the hardiness zone of the area in which the city is located

(5) *Ground cover.* All unimproved portions of a lot shall be sodded to the curb or street surface, except that:

i. Areas reserved for future city-approved building expansions may be seeded.
ii. Undisturbed areas containing existing viable natural vegetation which can be maintained free of weeds may be left undisturbed.
iii. Seeding may be used when the city determines sod is not practical or desirable, in areas such as, but not limited to, campus areas of schools, recreational playfields and open space, sites that are rough-graded and areas that cannot be developed (such as those in a power line easement).

    1. Seeding shall be confined to the rear yard area of a lot.
    2. On any lot on which a building is located as the principal use of the property, seeding shall not be used within 50 feet of the building.
    3. For purposes of the surety required in subsection (k) of this

section, seeding will be considered properly installed and vigorously growing when it looks like healthy sod.

c. *Credit for large trees.* The total number of required overstory trees may be reduced by one-half tree for each new deciduous tree measuring 4 1/2 inches or more in diameter, or each new coniferous tree measuring ten feet or more in height, which is planted on the lot. In no event, however, shall this credit result in a reduction in the total number of required trees by more than 25 percent. Measurements shall be taken as set forth in subsection (c)(3) of this section.

d. *Credit for existing trees.* The total number of required new overstory trees may be offset by the retention of existing overstory trees on the lot provided that such trees satisfy the requirements of subsection (c) of this section as to size and species. The department of community development shall recommend to the planning commission the amount of the credit for such existing trees based upon their location and distribution on the lot.

e. *Parking lot planting islands.* Planting islands within parking lots shall be required to visually break up expanses of hard-surface parking areas, to allow safe and efficient traffic movement, and to define rows of parking. Planting islands shall be landscaped and shall occupy at least four percent of the parking area.

f. *Irrigation system.* All affected properties shall install and maintain an irrigation system upon the property serving at least all turfed areas thereon, whether sodded or seeded.

g. *Interference with utilities.* The location of landscaping improvements required in this section shall be such that their placement and size at maturity will not interfere with any existing underground or overhead utility system or public right-of-way.

h. *Protection of existing vegetation during construction.* All existing vegetation to be saved upon a lot under development shall be protected from damage and/or destruction occurring as a result of activity which takes place during the construction process. No soil or other material shall be allowed to accumulate or be placed near any such vegetation in such a manner that the deterioration or death of such vegetation may result.

i. *Maintenance.* The owner of a lot upon which landscaping or screening is required by this Code shall maintain all plant materials in a sightly and healthy growing condition and promptly replace all dead or dying plant material. Plant materials located within the boulevard area shall be similarly maintained by the abutting property owner. If any plant material in the boulevard is not maintained or replaced as required in this subsection, the city may maintain or replace the plant material and assess the abutting property for the costs thereof.

i. *Performance surety.* The owner shall provide the city with cash, an approved letter of credit or other surety satisfactory to the city to guaranty the proper installation and vigorous growth of all landscaping elements and screening. Such

surety shall remain in effect for two years after the actual installation of materials and shall be in an amount equal to 100 percent of the estimated cost of material and installation of all proposed landscaping.

10. Lighting Plan:

a. For attached and mulit-family projects, a site lighting plan shall be submitted. Lighting shall conform to the following regulations:

(1) Any lighting used to illuminate an off-street parking area, sign or other structure shall be arranged so as to deflect light away from any adjoining residential zone or from the public streets. Direct or sky-reflected glare, where from floodlights or from high temperature processes such as combustion or welding, shall not be directed into any adjoining property. The source of lights shall be hooded or controlled in some manner so as not to light adjacent property. Bare incandescent lightbulbs shall not be permitted in view of adjacent property or public right-of-way.

(2) Any light or combination of lights which cast light on a public street shall not exceed one footcandle (meter reading) as measured from the centerline of the street. Any light or combination of lights which cast light on residential property shall not exceed one footcandle (meter reading) as measured from such property.

(3) All off-street parking areas for residential uses of 12 or more spaces and all off-street parking for commercial, industrial, institutional, and public uses (except neighborhood parks as identified in the city's comprehensive park system and recreation plan, as amended) shall be equipped with operable lighting designed to illuminate the surface of the parking area to a footcandle level of no more than eight, while maintaining an average illumination of one footcandle throughout the entire surface of the parking area.

(4) No light standard shall be placed as a freestanding structure within the parking area, unless within a safety island if placed in such area, or shall be placed around the perimeter of the parking area.

(5) All lighting must be so arranged as to reflect the light away from adjoining property, abutting residential uses, and public rights-of-way and be in compliance with section 36-819.

11. Tree Preservation/Replacement Plan

For properties in T-zones the following is required:

a. *Tree inventory.* Tree inventory shall include the species, diameter, condition and location of all trees at least eight DBH inches and shall be prepared by a forester, natural resources specialist, certified arborist, landscape architect or another qualified individual. Such qualified individual shall require approval by the

community development director.

b. *Tree preservation plan.* The tree preservation plan shall show and specify:

   i. Total diameter inches and species composition of trees at least eight DBH inches to be preserved;
   ii. Total number of diameter inches of trees to be removed;
   iii. Limits of tree clearing, tree protection zones and fencing;
   iv. Location, size and species of replacement trees required in section;
   v. Construction staging areas for parking and material storage including concrete washout areas;
   vi. Location of all underground utilities.

12. Wetland Replacement Plan:

a. *Wetland Alteration Conditional Use Permit.* Any plan that impacts wetlands shall submit a Wetland Alteration Conditional Use Permit

b. *Wetland inventory*. A wetland inventory and mitigation plan shall clearly delineate existing wetland areas, areas to be disturbed, and mitigation areas. The plans shall clearly show the total area of existing wetlands on the property and the area of alteration/disruption

13. Elevations:

a. For attached and multi-family projects and commercial, office or industrial, colored elevations of buildings shall be submitted.
b. Elevations shall also be submitted showing material callouts (these may non-colored.)
c. For detached residential projects, proposed home elevations shall be submitted or in the case of custom designed homes, examples of previous work shall be submitted (either photographs or renderings). All shall be in color
d. For homes whose back faces arterial roadways (both attached and detached) rear elevations shall be submitted.

DIVISION 2. PLANNED UNIT DEVELOPMENTS

Sec. 36-61. Purpose.

(a) A planned unit development (PUD) is intended to allow variation from the strict literal provisions of this chapter, including, but not limited to, requirements relating to setbacks, height, floor area, floor area ratio, lot area, width, depth, and yards. If a proposed development is approved by the city as a PUD as provided in this section, then the dimensions of the PUD as approved shall be deemed to be in compliance with all of the dimensional requirements of this chapter, including setbacks, height, floor area, floor area ratio, lot area, lot width, lot depth and yards.

(b) A PUD may be voluntary or required (as in the case of shopping centers). A PUD may be residential, business, industrial or mixed use in nature. A residential PUD may allow all uses permitted in the R-1 through R-5 zoning districts and must be developed pursuant to a conditional use permit within residentially zoned property unless mixed uses are a part of the PUD. A business PUD may allow all uses permitted in the B zoning district and must be developed pursuant to a conditional use permit within property zoned for business uses unless mixed uses are a part of the PUD. An industrial PUD may allow all uses permitted in the I zoning district and must be developed pursuant to a conditional use permit within property zoned for industrial uses. A PUD in a district zoned PUD shall allow mixed uses, and PUDs in which mixed uses are permitted shall be zoned PUD.

(c) A PUD is intended to result in a development in which the living or working environment is better than could otherwise have been achieved through strict enforcement of the dimensional requirements of other applicable sections of this chapter. A PUD will not be permitted unless the landowner demonstrates that the development would be consistent with the spirit and intent of the city's comprehensive plan, that the development would be consistent with the spirit and intent of this chapter, and that the development would tend to accomplish the following objectives for PUDs:

(1) For any PUD with a residential component guided low-medium density residential, over ten acres in size and outside the gravel mining area, or guided medium density residential or high density residential, regardless of size, and outside of the gravel mining area, shall be assessed against the project point system which ensures innovations within a single development having a greater variety in type, design, and siting of dwellings to meet the growing demands for housing at various economic levels and the growing demands for rental units as well as owner-occupied units;

(2) Higher standards of site and building design through the use of trained and experienced land planners, architects and landscape architects;

(3) The preservation and enhancement of desirable site characteristics such as natural topography and geographic features, and the protection of natural vegetation and water features;

(4) An efficient use of land resulting in smaller networks of utilities and streets, thereby lowering housing costs and public investments;

(5) A development pattern in harmony with the objectives of the city's comprehensive plan; and

(6) A more desirable environment than would be possible through the strict application of the zoning and subdivision regulations of the city.

(d) A PUD is intended to allow variation from the strict literal provisions of this chapter, including, but not limited to, requirements relating to setbacks, height, floor area, floor area ratio, lot area, width, depth, and yards.

(Code 1984, § 375:114(1); Ord. No. 04-16, § 1, 7-19-2004; Ord. No. 15-01, § 1, 1-5-2015)

Sec. 36-62. General standards.

(a) Scope. The following developments and redevelopments shall be subject to this division: (i) all developments and redevelopments within the gravel mining area; and (ii) all developments and redevelopments with a residential component not within the gravel mining area, except existing residential developments, and new residential developments created by subsection 30-8(b) and section 30-14.

(b) Inapplicability of variance provisions. The provisions of article II, division 5 of this chapter relating to variances shall not apply to this section.

(c) Subdivision. All properties within the scope of subsection 36-62(a) shall be platted pursuant to chapter 30. An application for subdivision, under chapter 30, of property within the scope of subsection 36-62(a) shall be considered premature and shall not be considered or processed until PUD approval has been granted.

(d) Ownership. An application for PUD approval must be filed by the landowner or jointly by all landowners of the property included in the project. The application and all submissions must be directed to the development of the property as a unified whole. In the case of multiple ownership, the approved plan shall be binding on all owners.

(e) Open space. A PUD is intended to preserve and concentrate open space. This can be done by either creating common open areas or by reserving specific amounts of open space on each lot. The open space requirements of this section shall be in addition to any public park dedication required by chapter 30.

(1) Residential PUDs. Residential developments shall result in a maximum of 40 percent coverage of the land outside public rights-of-way with impermeable surfaces.

(2) Business PUDs. Business developments shall result in a maximum of 75 percent coverage of the land outside public rights-of-way with impermeable surfaces.

(3) Industrial PUDs. Industrial developments shall result in a maximum of 75 percent coverage of the land outside public rights-of-way with impermeable surfaces.

(4) Mixed use PUDs. Mixed use developments shall result in a variable amount of land covered with impermeable surfaces. The actual amount shall be determined by calculating the amount of land occupied by the different uses and then applying the standards set forth in subsections (1) through (3) of this subsection.

(f) Operating and maintenance requirements for common open space and facilities. Whenever common open space or service facilities are provided within the PUD, the PUD plan shall contain provisions to ensure the continued operation and maintenance of such open space and service facilities to a predetermined reasonable standard. Common open space and service facilities within a PUD may be placed under the ownership of one or more of the following, as approved by the city council:

(1) The public, by dedication, where community-wide use is anticipated and the city council agrees to accept the dedication.

(2) Landlord control, where only use by tenants is anticipated.

(3) A property owners' association, provided all of the following conditions are met:

a. Prior to the use or occupancy or sale or the execution of contracts for sale of an individual building unit, parcel, tract, townhouse, apartment or common area, a declaration of covenants, conditions and restrictions or an equivalent document or a document such as specified by Minn. Stats. § 515A.2-105 and a set of floor plans such as specified by such statute shall be filed with the city, such filing with the city to be made prior to the filings of the declaration or document or floor plans with the recording officers of the county.

b. The declaration of covenants, conditions and restrictions or equivalent document shall specify that deeds, leases or documents of conveyance affecting buildings, units, parcels, tracts, townhouses, or apartments shall subject the properties to the terms of the declaration.

c. The declaration of covenants, conditions and restrictions shall provide that an owners' association or corporation shall be formed and that all owners shall be members of the association or corporation, which shall maintain all properties and common areas in good repair and which shall assess individual property owners proportionate shares of joint or common costs. This declaration shall be subject to the review and approval of the city attorney. The intent of this requirement is to protect the property values of the individual owner through establishing private control.

d. The declaration shall additionally, among other things, provide that, if the association or corporation fails to maintain properties in accordance with the applicable rules and regulations of the city or fails to pay taxes or assessments on properties as they become due and if the city incurs any expenses in enforcing its rules and regulations, which expenses are not immediately reimbursed by the association or corporation, then the city shall have the right to assess each property its pro rata share of such expenses. Such assessments, together with interest thereon and costs of collection, shall be a lien on each property against which each such assessment is made.

e. Membership must be mandatory for each owner and any successive buyer.

f. The open space restrictions must be permanent and not for a given period of years.

g. The association must be responsible for liability insurance, local taxes, and the maintenance of the open space facilities to be deeded to it.

h. A property owner must pay his pro rata share of the cost of the association by means of an assessment to be levied by the association which meets the requirements for becoming a lien on the property in accordance with state statutes.

i. The association must be able to adjust the assessment to meet changed needs.

j. The bylaws and rules of the association and all covenants and restrictions to be recorded must be approved by the city council prior to the approval of the development stage PUD plan.

(g) Staging of public and common open space. When a PUD provides for common or public open space, the total area of common or public open space or land escrow security in any stage of development shall, at a minimum, bear the same relationship to the total open space to be provided in the entire PUD as the stages or units completed or under development bear to the entire PUD.

(h) Density. The maximum residential density of a PUD may not exceed the maximum residential density permitted by the comprehensive plan, unless the PUD qualifies for additional density as follows, which shall be cumulative in effect:

(1) In areas designated on the land use plan as mixed low/medium density residential:

a. Density for the PUD as a whole may be 25 percent greater than would otherwise be permitted under the comprehensive plan if:

1. At least 30 percent, but no more than 50 percent of all dwelling units in the PUD, are affordable to households with incomes at or below 80 percent of the area median as determined by the metropolitan council; and

2. Of the units described in subsection (h)(1)a.1 above, at least 20 percent but no more than 50 percent of all dwelling units, and in no case more than 50 units, are affordable to families with incomes at or below 50 percent of the area median as determined by the metropolitan council.

b. Density for the PUD as a whole may be 12.5 percent greater than would otherwise be permitted under the comprehensive plan if at least 20 percent of all dwelling units shall be occupied by renters.

(2) In areas designated on the land use plan as mixed medium density residential:

a. Density for the PUD as a whole may be 6-2/3 percent greater than would otherwise be permitted under the comprehensive plan if:

1. At least 30 percent but no more than 50 percent of all dwelling units in the PUD, are affordable to households with incomes at or below 80 percent of the area median as determined by the metropolitan council; and

2. Of the units described in subsection (h)(1)a.1 above, at least 30 percent but no more than 50 percent of all dwelling units, and in no case more than 50 units, are affordable to families with incomes at or below 50 percent of the area median as determined by the metropolitan council.

b. Density for the PUD as a whole may be 3-1/3 percent greater than would otherwise be permitted under the comprehensive plan if at least 20 percent of all dwelling units shall be occupied by renters.

(3) Notwithstanding the density of the PUD as a whole, the density standards as expressed in section 36-8 shall apply to each different residential use included within the PUD.

(4) In residential PUDs that encompass both mixed low/medium density and mixed medium density land use designations, the standards applicable to each density designation shall apply in the area of the PUD containing that designation.

(5) Density bonuses shall not be granted on lands governed by the gravel mining area special area plan.

(i) Utilities to be installed underground. In any PUD, all utilities, including telephone, electricity, gas and telecable, shall be installed underground.

(j) Water and sewer connections.

(1) Water connections. Where more than one property is served from the same service line, a shut-off valve must be located in such a way that each unit's service may be shut off by the city, in addition to the normally supplied shut-off at the street.

(2) Sewer connections. Where more than one unit is served by a sanitary sewer lateral which exceeds 300 feet in length, provision must be made for a manhole to allow adequate cleaning and maintenance of the lateral. All maintenance and cleaning shall be the responsibility of the property owners' association or owner.

(k) Roadways. All streets which give access to single-family dwellings shall be public and shall conform to the design standards of the subdivision regulations contained in chapter 30 or such alternative standard accepted by the city council which accomplishes the same quality of public service. No private drive may serve more than four single-family units, except that up to 12 units in no more than two buildings of the housing units known as eight-plexes or twelve-plexes may be accessed by a private drive.

(l) Landscaping. In any PUD, landscaping shall be provided in accordance with the standards listed in article VIII of this chapter.

(m) Urban development and availability of public services. All development will be carefully phased so as to ensure that all developable land will be able to develop at such time as services and facilities are available.

(1) Lands which have the necessary available municipal facilities and services will be granted approval in accordance with existing ordinances and development techniques.

(2) Lands which lack the available facilities and services will be granted approval for development at such times as the facilities and services have been made available by the continuing public improvement program.

(3) No PUD will be permitted in areas not having city water and sanitary sewer available.

(n) Setbacks. The following setback requirements shall apply to all non-single-family detached portions of PUDs. In single-family detached areas, the standards of the R-2 zone shall apply:

(1) The front and side yard restrictions at the periphery of the planned unit development site, at a minimum, shall be the same as imposed in the zoning districts which permit the uses within the development.

(2) Buildings shall be located at least 15 feet from any street right-of-way along those roadways which are part of the internal street pattern. Private garages shall be 25 feet from any street right-of-way.

(3) No building within the project shall be nearer to another building than one-half the sum of the building heights of the two buildings.

(Code 1984, § 375:114(2); Ord. No. 04-16, § 1, 7-19-2004; Ord. No. 04-22, § 1, 10-4-2004; Ord. No. 15-16, § 3, 11-2-2015)

Sec. 36-63. Submission requirements.

The following exhibits, analyses and plans shall be submitted to the planning commission and council during the PUD process, together with the required fees set forth in chapter 16, article XI, at the times specified in section 36-64. Each stage referred to in this section shall be the subject of a separate application, and the information submitted for each stage shall be considered a separate written request for purposes of Minn. Stats. § 15.99.

(1) Concept stage.

a. Information required for applications:

1. The landowner's name and address and interest in the subject property.

2. The applicant's name and address if different from the landowner.

3. The names and addresses of all professional consultants who have contributed to the development of the PUD plan being submitted, including the attorney, land planner, engineer and surveyor.

4. Evidence that the applicant has sufficient control over the subject property to effectuate the proposed PUD, including a statement of all legal, beneficial, tenancy and contractual interests held in or affecting the subject property and including an up-to-date certified abstract of title or registered property report, and such other evidence as the city attorney may require to show the status of title or control of the subject property.

b. Present status:

1. The address and legal description of the subject property.

2. A map depicting the existing zoning category and present use of the subject property and all land within 1,000 feet thereof and showing the precise location of existing streets, property lines, easements, water mains and storm and sanitary sewers, with invert elevations on and within 200 feet of the subject property.

c. A written statement generally describing the proposed PUD and the market which it is intended to serve, its relationship to the city's comprehensive plan, and how the proposed PUD is to be designed, arranged and operated in order to permit the development and use of neighboring property in accordance with the applicable regulations of the city.

d. A written statement describing the city goals to be accomplished by the PUD and the way the development accomplishes them. The statement shall also explain why the PUD serves better than the zoning standards in meeting the city's goals.

e. Graphic reproductions of the existing site conditions at a scale of no more than 100 feet to the inch. All of the graphics should be at the same scale as the final plan to allow easy cross reference. The site condition graphics shall include;

1. Contours at a minimum two-foot intervals.
2. Location, type, and extent of tree cover.
3. Slope analysis.
4. Location and extent of water bodies, wetlands and streams and floodplains within 300 feet of the subject property. Preliminary wetland sequencing and replacement plans pursuant to federal, state and local laws and codes shall be provided and shall be accompanied by quantified wetland impact data.
5. Significant rock outcroppings.
6. Existing drainage patterns.
7. Vistas and significant views.
8. Soil conditions which affect development.

f. Schematic drawing of the proposed development concept including, but not limited to, the general location of major circulation elements, public and common open space, and residential and other land uses.

g. A statement of the estimated total number of dwelling units proposed for a residential or mixed use PUD and a tabulation of the proposed approximate allocations of land use expressed in acres and as a percent of the total project area, which shall include at least the following:

1. Area devoted to residential uses.
2. Area devoted to residential use by building type.
3. Area devoted to common open space.
4. Area devoted to public open space.
5. Approximate area devoted to streets.
6. Approximate area, and floor area, devoted to commercial uses.
7. Approximate area, and floor area, devoted to industrial or office use.

h. When the proposed PUD includes provisions for public or common open space or service facilities, a statement describing the provision that is to be made for the care and maintenance of such open space or service facilities. If it is proposed that such open space be owned and/or maintained by a homeowners' association, copies of the proposed articles of incorporation and bylaws of such association shall be submitted.

i. General intents of any restrictive covenants that are to be recorded with respect to property included in the proposed PUD.

j. Schematic utilities plans indicating placement of water lines and sanitary and storm sewers.

The planning commission may excuse an applicant from submitting any specific item of information or document required in this stage which it finds to be unnecessary to the consideration of the specific proposal for PUD approval. The planning commission may require the submission of any additional information or documentation which it may find necessary or appropriate to full consideration of the proposed PUD or any aspect thereof.

(2) Development stage. Development stage submissions shall depict and outline the proposed implementation of the concept stage for the PUD and shall not be submitted until the concept plan has been approved by the city council pursuant to section 36-64(a)(3). Information from the concept stage may be included for background and to provide a basis for the submitted plan. The development stage submissions shall include, but not be limited to:

a. Plans, drawn to a scale of not less than one inch equals 100 feet (or the scale requested by the zoning administrator), containing at least the following information:

1. The proposed name of the development, which shall not duplicate or be similar in pronunciation to the name of any plat theretofore recorded in the county.
2. A site plan prepared in conformance with the requirements of article II, division 3 of this chapter.
3. Location, designation and total area proposed to be conveyed or dedicated for public open space, including parks, playgrounds, school sites and recreational facilities.

4. Any other information that may have been required by the planning commission or council in conjunction with the approval of the general concept plan.

b. Grading and site alteration plans illustrating changes to existing topography and natural site vegetation. The plan should clearly reflect the site treatment and its conformance with the approved concept plan.

c. Preliminary and final plat prepared in accordance with chapter 30.

d. A statement summarizing all changes which have been made in any document, plan data or information previously submitted, together with revised copies of any such document, plan or data.

e. Such other and further information as the planning commission, zoning administrator or council shall find necessary to a full consideration of the entire proposed PUD or any stage thereof.

The planning commission may excuse an applicant from submitting any specific item of information or document required in this subsection which it finds to be unnecessary to the consideration of the specific proposal for PUD approval.

(3) Final plan stage. After approval of a concept plan for the PUD and approval of a development stage plan for all or a section of the proposed PUD, the applicant will submit the following material for review by the city staff prior to issuance of a building permit:

a. Proof of recording any easements and restrictive covenants prior to the sale of any land or dwelling unit within the PUD and of the establishment and activation of any entity that is to be responsible for the management and maintenance of any public or common open space or service facility.

b. All certificates, seals and signatures required for the dedication of land and recordation of documents.

c. Final site plan.

d. Final architectural working drawings of all structures.

e. Final engineering plans and specifications for streets, utilities and other public improvements, together with a developer's agreement for the installation of such improvements and financial guarantees for the completion of such improvements.

f. Any other plan, agreements, or specifications necessary for the city staff to review the proposed construction. All work must be in conformance with the Minnesota State Building Code. (See sections 8-31 and 8-32.)

(Code 1984, § 375:114(3))

Sec. 36-64. Procedure for review and approval.

(a) Concept plan.

(1) Purpose. The concept plan provides an opportunity for the applicant to submit a plan to the city showing his basic intent and the general nature of the entire development without incurring substantial cost. The concept plan serves as the basis for the public hearing so that the proposal may be publicly considered at an early stage. The following elements of the proposed general concept plan represent the immediately significant elements which the city shall review and for which a decision shall be rendered:

a. Overall maximum PUD density.

b. General location of major streets and pedestrian ways.

c. General location and extent of public and common open space.

d. General location of residential and nonresidential land uses with approximate type and intensities of development.

e. Other special criteria for development.

(2) Schedule.

a. The developer shall meet with the director of community development and/or city staff to discuss the proposed development.

b. The developer shall submit the necessary data as required in section 36-63(1) and subsection (a)(1) of this section.

c. After verification by the staff that the required plan and supporting data are adequate, the zoning administrator shall set a public hearing for a regular meeting of the planning commission.

1. The planning commission shall conduct the hearing, and report its findings and make recommendations to the city council.

2. Notice of the hearing shall consist of the property identification number and street address or common description, a description of the request, and a map detailing the property location, and shall be published in the official newspaper at least ten days prior to the hearing.

3. Written notification of the hearing shall also be mailed at least ten days prior to all owners of land within 500 feet of the boundary of the property in question.

4. Failure of a property owner to receive the notice shall not invalidate any such proceedings as set forth within this chapter.

d. A technical staff report shall be prepared on the proposed development, and distributed to the planning commission and the applicant prior to the meeting.

e. The applicant or a representative thereof shall appear before the planning commission in order to answer questions concerning the proposed development. The planning commission and city staff shall have the authority to request additional information from the applicant concerning operational factors or to retain expert testimony with the consent and at the expense of the applicant concerning operational factors, such information to be declared necessary to establish performance conditions in relation to all pertinent sections of this chapter.

f. The planning commission shall submit its written report and recommendations to the council and applicant.

1. Such report shall contain the findings of the planning commission with respect to the compliance of the general concept plan with the provisions of this chapter and all other applicable federal, state and local codes and ordinances.

2. If the planning commission shall find the concept plan, or any amended plan agreed to by the petitioner, to be in all other respects complete and in compliance with this chapter and other applicable federal, state and local codes and ordinances, it shall recommend approval of the plan. Otherwise, it shall recommend denial of approval.

3. If the planning commission fails to act within the time specified in this section, it shall be deemed to have recommended the plan for approval.

g. If time permits, the council may resubmit the plan to the planning commission for further consideration of specified items. City council approval shall require a positive vote by majority vote of the council membership.

(3) Optional submission of development stage plan. In cases of single-stage PUDs, or where the applicant wishes to begin the first stage of a multiple-stage PUD immediately, the applicant may, at his option, submit an application for development stage plan approval for the proposed PUD simultaneously with the submission of the application for concept plan approval. In such case, the applicant shall comply with all provisions of this chapter applicable to submission of the development stage plan. The planning commission and council shall consider such applications simultaneously and shall grant or deny development stage plan approval in accordance with the provisions of subsection (b) of this section.

(4) Effect of concept plan approval. Unless the applicant shall fail to meet time schedules for filing development stage plans or shall fail to proceed with development in accordance with the plans as approved or shall in any other manner fail to comply with any condition of this chapter or of any approval granted pursuant to it, a concept plan which has been approved or PUD agreement signed by the applicant shall not, by any action of the city taken without the consent of the applicant, be modified, revoked or otherwise impaired while the application for approval of development stage and final plans is pending.

(5) Limitation on concept plan approval. Unless a development stage plan covering at least 50,000 square feet of building area in a nonresidential PUD has been filed within one year from the date the council grants concept plan approval, or, in a residential PUD, a development stage plan for 20 percent of the entire concept stage plan property is filed within one year from the date the council grants concept plan approval and, for the remaining concept stage plan property, a development stage plan for 20 percent of the entire concept stage plan property is filed within every two years after the first development stage plan approval, or in any case where the applicant fails to file development stage plans and to proceed with development in accordance with the provisions of this chapter and of an approved concept plan, the approval, subject to the following, shall expire.

a. At any time within 30 days before such deadline, the applicant may file with the zoning administrator a written request that the deadline be extended one year beyond the date the extension is granted.

b. The zoning administrator shall place the applicant's request on the agenda of a regularly scheduled council meeting to be held within 30 days of such filing

c. Upon application by the applicant, the council, at its discretion, may extend the filing deadline for any development stage plan for one one-year period when, for good cause shown, such extension is necessary.

d. Only one such extension may be made.

e. At the time of concept stage plan approval the council may modify the filing deadline with a simple majority vote.

(b) Development stage.

(1) Purpose. The purpose of the development stage plan is to provide a specific and particular plan upon which the planning commission will base its recommendation to the council and with which substantial compliance is necessary for the preparation of the final plan.

(2) Submission of development stage plan. Upon approval of the concept plan, and within the time established in subsection (a)(5) of this section, the applicant shall file with the zoning administrator a development stage plan consisting of the information and submissions required by section 36-63(2) for the entire PUD or for one or more stages thereof, together with the fee required in chapter 16, article XI.

a. The development stage plan shall refine, implement and be in substantial conformity with the approved concept plan.

b. A detailed plan shall be deemed not to be in substantial conformity with an approved concept plan if it:

1. Departs by more than ten percent from the maximum density established by the concept plan.

2. Decreases by more than five percent the area approved for public and common open space or changes the general location of such areas.

3. Relocates approved circulation elements to any extent that would decrease their functionability, adversely affect their relation to surrounding lands and circulation elements or reduce their effectiveness as buffers or amenities.

4. Significantly alters the arrangement of land uses within the PUD.

5. Departs from the concept plan in any other manner which the planning commission shall, based on stated findings and conclusions, find to materially alter the plan or concept for the proposed PUD.

(3) Review and action by city staff and planning commission.

a. Immediately upon receipt of a completed development stage plan, the plan shall be referred to the following city staff and/or official bodies for the indicated action:

1. The city attorney for legal review of all documents.

2. The city engineer for review of all engineering data for compliance with the requirements of this chapter and review of the city/developer agreement.

3. The city building official for review of all building plans for compliance with the requirements of this chapter, the Minnesota State Building Code and any other applicable federal, state, or local codes.

4. The zoning administrator for review of all plans for compliance with the intent, purpose and requirements of this chapter and conformity with the concept plan and comprehensive plan.

5. The city planning commission for review and recommendation to the council.

6. When appropriate, as determined by the zoning administrator, to the park and recreation board for review and recommendations.

7. When appropriate, as determined by the zoning administrator, to other special review agencies such as the watershed districts, Soil Conservation Service, highway department, or other affected agencies.

b. All staff designated in subsections (3)a.1 through 4 of this subsection shall submit their reports in writing to the planning commission and applicant.

(4) Schedule.

a. The developer shall meet with the zoning administrator and city staff to discuss specific development plans.

b. The applicant shall file a development stage application within one year after concept plan approval or any extension granted by the council, together with all supporting data and a filing fee as set forth in chapter 16, article XI or the concept plan approval is null and void.

c. After verification by the staff that the required plan and supporting data are adequate, the planning commission shall itself review the reports and plans and submit its written report and recommendations to the council and applicant.

1. The applicant or a representative thereof shall appear before the planning commission in order to answer questions concerning the proposed development.

2. The planning commission and city staff shall have the authority to request additional information from the applicant concerning operational factors or to retain expert testimony with the consent and at the expense of the applicant concerning operational factors, such information to be declared necessary to establish performance conditions in relation to all pertinent sections of this chapter.

3. The commission's report shall contain its findings with respect to the conformity of the development stage plan to the approved concept plan.

4. Should any changes be found to exist, the commission shall comment with respect to the merit or lack of merit of any departure of the development stage plan from substantial conformity with the concept plan and with respect to the compliance of the development stage plan with the provisions of this chapter and all other applicable federal, state and local codes and ordinances.

5. If the planning commission shall find substantial conformity with the concept plan and the commission shall further find the development stage plan to be in all other respects complete and in compliance with this chapter and other applicable federal, state and local codes and ordinances, it shall recommend approval of the plan. Otherwise, it shall recommend denial of approval.

6. If the planning commission fails to act within the time specified in this section, it shall be deemed to have recommended the plan for approval.

d. Within the time prescribed in subsection (d) of this section, the council shall either approve or deny the plan. If time permits, the council may resubmit the plan to the planning commission for further consideration of specified items.

e. The city administrator shall instruct the city attorney to draw up a PUD agreement which stipulates the specific terms and conditions approved by the city council and accepted by the applicant. This agreement shall be signed by the mayor, the city clerk and the applicant.

1. Where the development stage plan is to be resubmitted or denied approval, the council action shall be by written report setting forth the reasons for its action.

2. In all cases, a certified copy of the document evidencing council action shall be promptly delivered to the applicant by the zoning administrator.

(5) Limitation on development stage plan approval. Unless development has commenced or an application for final plat has been filed within one year from the date the council grants development stage plan approval, or within two years from the date the council approves the corresponding final plat for the area designated in the development stage plan as the first stage or the entire boundary of the corresponding development stage area of the PUD, or in any case where the applicant fails to proceed with development in accordance with the provisions of this chapter, the approval, subject to the following, shall expire.

a. At any time within 30 days before such deadline, the applicant may file with the zoning administrator a written request that the deadline be extended one year beyond the date the extension is granted.

b. The zoning administrator shall place the applicant's request on the agenda of a regularly scheduled council meeting to be held within 30 days of such filing.

c. The council at its discretion may grant the extension, for not more than one year, for, when good cause shown, such extension is necessary.

d. Only one such extension may be made.

e. In any case where development plan approval expires, the council may forthwith adopt a resolution repealing the general concept plan approval and the development stage plan approval for that portion of the PUD.

(6) Site improvements. At any time following the approval of a development stage plan by the council, the applicant may, pursuant to the applicable ordinances of the city, apply for, and the city engineer may issue, grading permits for the area within the PUD for which development stage plan approval has been given.

(7) Schedule. Upon approval of the development stage plan, the applicant shall file with the zoning administrator necessary applications, permits and agreements consistent with the development stage plan approval for construction and completion of the project.

(8) Issuance of building permits and other permits. Except as otherwise expressly provided in this chapter, upon receiving notice from the zoning administrator that the approved development stage plan has been recorded and upon application of the applicant pursuant to the applicable ordinances of the city, all appropriate officials of the city may issue building and other permits to the applicant for development, construction and other work in the area encompassed by the approved development stage plan; provided, however, that no such permit shall be issued unless the appropriate official is first satisfied that the requirements of all codes and ordinances which are applicable to the permit sought have been satisfied.

(9) Inspections during development.

a. Following approval of a PUD, or a stage thereof, the zoning administrator shall, at least annually until the completion of development, review all permits issued and construction undertaken and compare actual development with the approved development schedule.

b. If the zoning administrator finds that development fails in any respect to comply with the PUD plans as finally approved, he shall immediately notify the council. Within 30 days of such notice, the council shall either by ordinance revoke the PUD permit, and the land shall thereafter be governed by the regulations applicable in the district in which it is located, or shall take such steps as it shall deem necessary to compel compliance with the development stage plan as approved, or shall require the landowner or applicant to seek an amendment of the development stage plan.

(Code 1984, § 375:114(4); Ord. No. 04-09, § 3, 4-19-2004; Ord. No. 04-16, § 1, 7-19-2004; Ord. No. 07-17, § 1, 8-20-2007)

Sec. 36-65. Growth management plan; project point system.

(a) Project point system. All applications, subject to this division with a residential component guided low-medium density residential, over ten acres in size and outside the gravel mining area, or guided medium density residential or high density residential, regardless of size, and outside of the gravel mining area, for development stage plan shall be assessed and reviewed simultaneously against the project points system, which is on file at city offices and is hereby made a part of this section. In such case, the applicant shall comply with all provisions of this chapter applicable to the application. The subject application shall be reviewed and assessment of points shall be completed by city staff and a written report shall be submitted to the planning commission and the city council for their consideration. The planning commission and the city council shall consider said application and shall grant or deny development stage plan approval in accordance with the provisions of subsection 36-64(b) and this section.

(b) Submission requirements. In addition to the submission requirements of section 36-63, applicants must submit any information to satisfy the categories in the project point system and such other information as the planning commission, city staff or city council shall find necessary to allow a full consideration of the enter proposed PUD.

(c) Utilization of specific categories. Only categories in the project point system that have the opportunity to be utilized and actually exist from the proposed PUD shall be considered in the assessment of the PUD under the project point system. Applicant must provide evidence sufficient to the city that a specific category should not be considered. Categories that are determined by the city not to have the opportunity to be utilized nor actually exist shall not be considered in the determination of points.

(d) Minimum points required. A PUD subject to this section must achieve at a minimum 75 percent of the total points possible under the project point system. Any PUD not achieving the above minimum percentage of points shall not be granted approval.

(Ord. No. 04-16, § 1, 7-19-2004; Ord. No. 05-08, § 1, 3-7-2005; Ord. No. 15-01, § 2, 1-5-2015)

DIVISION 3. SITE PLANS

Sec. 36-81. Purpose.

This division is established to provide comprehensive procedures and standards designed to ensure city review procedure for developments (other than single-family detached dwellings, two-family dwellings, planned unit developments, and public trails, playlots, neighborhood parks, and playfields) seeking to locate or expand within the city. This procedure will provide the city with the opportunity to ensure a development's conformance with the city development regulations and to provide the city with a reasonable degree of discretion in determining the suitability of development proposal impacts upon the general welfare, public health, and safety. In making this determination, whether or not the site plan is to be approved, the city will consider all applicable ordinance development standards, the nature of the land and/or buildings, whether or not any use is already in existence and located on the same premises, or on any adjoining roads, and all other

or further factors as the city shall deem prerequisites of consideration in determining the effect of the development on the general welfare, public health and safety. The site plan review procedure is also intended to ensure the development of capable and quality site systems in the areas of:

(1) Utilities.

(2) Transportation.

(3) Site drainage.

(4) Open spaces.

(5) Site environment and landscaping.

(6) Structure/lot area relationships.

(Code 1984, § 375:117(1))

Sec. 36-82. General requirements.

(a) Application for approval. An application for site plan approval must be filed with the city for all developments (except for single-family detached and two-family dwellings, development within a PUD, and public trails, playlots, neighborhood parks, and playfields) within the city. Such application shall be filed with the director of community development on an official application form and shall be accompanied by a nonrefundable fee and any surety, escrow, or deposit as provided for by the city council as set forth in chapter 16, article XI. Formal review and approval of the plans must be given by the city staff before any related site development can be pursued.

(b) Ownership of property. An application for a site plan approval must be filed by the landowner or jointly by all landowners of the property included in a project. The application and all submissions must be directed to the development of the property as a whole. In the case of multiple ownership, the approved final plan shall be binding on all owners.

(c) Consistency with comprehensive plan and zoning regulations. The proposed site plan shall be consistent with the city's comprehensive plan and this chapter.

(d) Plan submission. Ten sets of all site plans and 8½-inch by 11-inch transparencies thereof shall be submitted to the community development department with all required information. The plan shall be considered as officially submitted only when all of the information and fee requirements are met.

(e) Contents. All site plan submissions shall be drawn to a scale of one inch equals 50 feet or less (engineering scale only) and be produced in a fashion which ensures legibility and clarity. In addition to the full-scale plan, an additional reduction of the plan on an 8½-inch by 11-inch sheet shall be required as part of the submission. The site plan shall contain at least the following information, and all additional information as required by city staff:

(1) General information.

a. The landowner's name, address and phone number.

b. The applicant's name, address and phone number, if different from the landowner, and his interest in the subject property.

c. The names, addresses, and phone numbers of all professional consultants who have contributed to the development of the plan being submitted, including the architect, land planner, engineer, surveyor, and attorney.

d. Evidence that the applicant has sufficient control over the subject property to effectuate the proposed site plan.

e. Date of plan preparation.

f. Dates and descriptions of all revisions.

g. North point indication.

h. The statement that construction shall be in accordance with the city's Standard Specifications for Utility and Street Construction, 1979, as amended.

(2) Present surrounding area status.

a. The address and legal description of the subject property.

b. The existing zoning classification and present use of the subject property and all lands within 200 feet of the subject property.

c. A map depicting the existing development of the property and all land within 200 feet.

d. A plan showing the precise location of existing streets, property lines, easements, water mains, and storm and sanitary sewers with invert elevations on and within 100 feet of the subject property.

(3) Present on-site status. All of the graphics should be the same scale to allow easy cross-reference.

a. Contours at minimum two-foot intervals on and within 20 feet of the subject property.

b. Location, type, and extent of tree cover.

c. Sufficient spot elevations and/or contours to indicate changes in slope on and within 20 feet of the subject property. Elevations of the centerline and gutter line of existing streets at each proposed access must be shown.

d. Location and extent of water bodies, wetlands and streams, and floodplains within 300 feet of the subject property.

e. Significant rock outcroppings.

f. Existing drainage patterns.

g. Vistas and significant views.

h. Soil conditions as they affect development.

(4) Utility plan. Plans indicating the location of water and sanitary sewer lateral and service locations. Also indicated shall be the size and type of pipe and all other information, such as hydrants and cleanouts, as may be required by the city engineer.

(5) Property dimension plan. Plans showing property lines, dimensions, lot area, required yard setbacks, easements and rights-of-way of the property and any significant topographical or physical features of the property based upon a certified survey.

(6) Structure information plan. Plans showing the location, size, use and arrangement, including height in stories and feet and total square feet of ground area coverage and floor area, of proposed buildings. Also provided shall be architectural plans showing building elevations and exterior wall finishes of proposed buildings.

(7) Internal circulation plan. Plans showing the location, dimensions and number of driveways, entrances, fire lanes, concrete entrance aprons, curb cuts, concrete curbing and gutter, parking stalls, parking lot islands, loading spaces, access aisles, concrete sidewalks, and all other circulation elements of the site.

a. All site elements as listed in this subsection shall have noted on the plan a related cross section of element composition and construction design.

b. All material compositions, i.e., bituminous, gravel, concrete, sod, etc., shall be noted on the plan.

c. Spot elevations, including high points, corners of parking lots, and existing street elevations, shall also be shown on the plan.

(8) Landscaping, screening and berming plan. Plans showing detailed locations, sketches, and provisions of existing and required landscaping, berming, and screening elements of the site.

a. All those related elements which will be removed shall be properly noted on the plan.

b. All plant screening and landscaping elements shall be broken out into types, sizes, and total numbers proposed in the plan.

c. All fences shall be shown and related elevations and cross sections provided.

(9) Grading and drainage plans. Plans showing all existing and proposed site contours in no more than two-foot contours.

a. Also provided shall be detailed site drainage plans, including the detailing of the site's storm sewer system with catchbasins and invert elevations.

b. Casting types must be shown for all catchbasins.

(10) Erosion control plan. Plans for site erosion control as required by the city engineer.

(11) Lighting plan. Plans showing location, height, and candlepower of all luminaries on the site. All parking lot lighting standards located within the parking lot area must be located within parking lot islands.

(12) Staging plan. If the project is to be constructed in several stages, all stages shall be clearly detailed out on the plan. This shall also include future expansion elements of a proposal.

(13) Sign plan. Plans showing all proposed signage for the site in accordance with chapter 24.

(14) Planned improvements summary. Calculation of the area, length, amount or other summary dimensions or inventory for each improvement contemplated pursuant to this subsection (e), which calculation shall be useful to the city planning department in determining the amount of the surety to be provided pursuant to section 36-84.

(Code 1984, § 375:117(2))

Key Steps in the County Plat Review Process

- Preliminary Plat is submitted to the county by the city
- County acknowledges receipt and notes any missing items via mail-back card
- Once the submittal is deemed complete – the 30-day review period begins.
- The county Plat Review Committee meets to discuss the plat. Follow-up meetings may occur if further information or analysis is needed.
- The county submits a comment letter to the city noting any issues, concerns or requirements.
- The city responds back to the county via letter regarding how the county comments will be addressed. If any unresolved issues remain – the city schedules a meeting with county staff to discuss.
- The city council approves the preliminary and final plats.
- The property owner / developer submits the plat to the county surveyor's office for registration. ***Submittal items must include:***
    - ***Evidence of the submission of the preliminary plat to the county.***
    - ***Copy of the county comment letter on the preliminary plat.***
    - ***Copy of the city response to the county comment letter and evidence of any follow-up meetings held with the county to resolve remaining issues.***

Information on the Hennepin County Preliminary Plat / Development Review Process

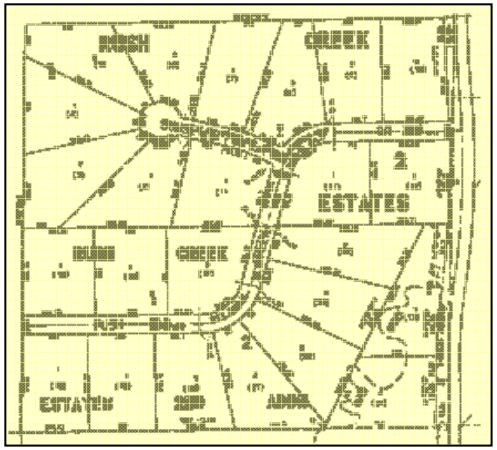

January 2010

Hennepin County

Transportation Planning

Purpose of this Brochure

This brochure was developed to clarify how the county plat review process works, who is responsible for submittals to the county, and what type of response schedule can be anticipated.

Minnesota State Statutes MS 505.02, 505.03 and 462.358 stipulate that cities need to submit plats to the county for review and comments. These statutes also specify what items of information must be submitted and what time schedules apply.

Who Should Submit Plats ?

For formal plat reviews, the county does not accept plat submissions from third parties – the submissions must come from the city directly. City submission is important to ensure completeness of the submission, provide consistency in the process, and to assure good communication.

Prior to a formal submittal, county staff is very willing to examine concept layouts, preliminary site plans, or sketch plans. Cities, developers, project consultants, or property owners can submit this type of draft information. The benefit of an early review is that many issues can be identified and possibly resolved prior to the formal plat review process (often speeding up all subsequent reviews).

Where to Submit Plats

Preliminary Plats should be submitted to:

Hennepin County
Transportation Planning Division
1600 Prairie Drive
Medina, MN 55340-5421

Questions or comments can be directed to:

Bob Byers, P.E., Senior Professional Engineer
(612) 596-0354

Plat Submittal Checklist

Plat submittals to the county should include a transmittal letter and a set of legible plans that include the following information:

- ❑ The transmittal letter should include the city contact person, the dates of upcoming city actions such as Planning Commission or City Council meetings, and when a response is needed from the county.
- ❑ A location map of the site relative to area roadways and local streets.
- ❑ A site plan map with scaled dimensions authenticated by a registered engineer or land surveyor showing:
  - Date, title, scale, and north arrow
  - All existing and proposed property lines
  - Lot dimensions, right-of-ways, & easements
  - Existing centerline and paved area of the county roadway (which is not always centered in the right-of-way)
  - Proposed development building footprints
  - Parking lot layouts, aisle configuration
  - Locations of ingress and egress to the proposed platted area including existing and proposed driveway locations.
  - Locations of other nearby driveways, street intersections and access points on the county roadway in the vicinity of the proposed plat. This would include driveways immediately adjacent to or across from the proposed plat.
  - The outlet for and means of disposal of surface waters from the proposed platted area
- ❑ A written description of the current and proposed use of the property including land use type (commercial, industrial, residential, etc.) and specific uses (discount store, convenience center, etc.) if known.
- ❑ If the plat is for non-residential uses, include an estimate of the amount of daily traffic the development is expected to generate.

How are Plats Evaluated ?

County staff evaluates proposed plats for a number of items that affect county roadways. Some examples of review items include;

Safety Issues
- Conformance with entering sight distance guidelines
- Unusual weaving & merging maneuver conflicts
- Turn lane / auxiliary lane needs

Access Management
- Proposed driveway and street entrance compliance with county access spacing guidelines
- Opportunities for access reorientation and / or consolidation
- Driveway design, throat lengths

Right-of-Way Needs
- Anticipated future roadway section
- Right-of-way needs for turn lanes / auxiliary lanes
- Other needs (pedestrian / bike accommodations)

Operational Elements
- Intersection capacity analysis
- Turn lane / auxiliary lane design configurations
- Traffic control needs
- Potential on-site circulation impacts ?

Pedestrian and Bicycle Accommodations
- Is roadway designated as part of a city bike plan or the County Bicycle System Plan ?

Miscellaneous Items
- Drainage needs (road and / or site ?). Any encroachments within roadway right-of-way ?
- Proposed grading impacts

Review Schedule

State Statutes provide the county up to ***30 calendar days*** for review after receipt of the plat. This review period only starts when the county receives a ***complete*** plat submittal.

As part of the plat review process, the county will confirm the receipt of the plat with the city and provide notification of any missing information.

The back page of this brochure illustrates the key time points for the county review process.

City of Maple Grove

Watershed Districts

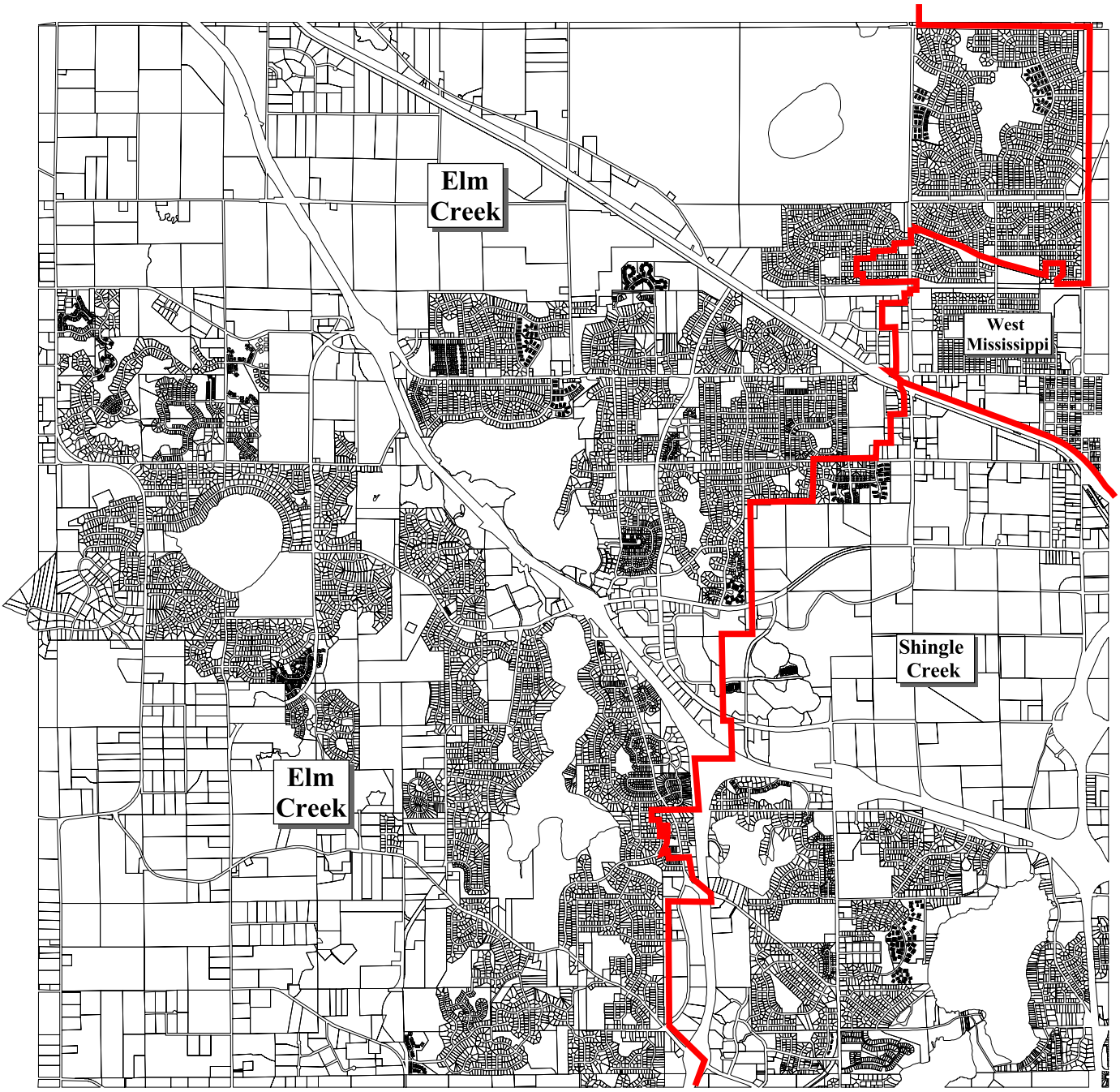

Elm Creek Watershed Management Commission
Plan Review Requirements

The Commission requires submittal of plans for activities that may impact the natural resources of the watershed. The information below lists the requirements of the Commission for review and approval of plans. Complete applications must be submitted ten (10) working days prior to the meeting date for consideration at the Commission meeting. Applicants must present all of the items below prior to consideration by the Commission. The Commission meets on the second Wednesday of each month at 3:00 p.m. at the Plymouth City Hall. One full-size and one reduced copy (11" x 17") of the plan must be submitted to the City along with the application form and appropriate fee. The City will forward the plans to the Hennepin Conservation District to be reviewed on behalf of the Commission.

Erosion and Sediment Control

An erosion and sediment control plan is required for the following type of developments:

1. Any development that is fully or partially within a site classified as a Critical Construction Site Erosion Area in the Elm Creek Watershed Plan (Chapter VI, pp. 1-16), **This covers pretty much everything.
2. All commercial/industrial subdivisions or site plan developments,
3. All residential subdivisions greater than 20 acres in size with more than two dwelling units per acre,
4. All residential subdivisions, regardless of size, with more than three dwelling units per acre.

The plan must be forwarded with the following information for review, comment and approval:

- An erosion and sediment control plan prepared by a qualified individual, shall show proposed practices, time of implementation of those practices relative to other construction activities (sequencing plan), and maintenance of those practices for retaining waterborne sediments on-site during the period of construction. The plan shall show how the site will be restored, covered, or revegetated after construction. Details for each practice must be shown on the plans. The plan must include identification of all temporary and permanent erosion control measures that will remain in place until permanent vegetation is established. Examples include, but are not limited to seeding, mulching, sodding, silt fence, erosion control blankets, temporary diversions, rock check dams (hay bale check dams may not be used), and riprap protection. The plan must comply with the provisions set forth in the MPCA or HCD manuals.
- Property lines and delineation of lands under ownership of the applicant and the work areas,
- Delineation of wetlands, existing drain tiles and ditches, waterways, shoreland and floodplain areas,
- Delineation of forested areas,
- Existing and proposed site contour elevations at two-foot intervals, related to the NGVD 1929 datum, within 100 feet of the site,
- Proposed and existing stormwater facilities location, alignment and elevation,
- Identification of all temporary and permanent erosion controls,
- Identification of waterway or waterbody where stormwater runoff will be discharged,
- A plan showing that the lowest floor elevation of all new residential, commercial or industrial structures are a minimum of two (2) feet above the established 100-year high water elevation (if the site is within mapped flood plain or upland storage area),
- Computation of change in flood storage capacity resulting from proposed grading elevation (if the site is within mapped flood plain or upland storage area),

Following are not required by the Commission but may be required by the Cities or due to State regulations:

- Copy of the MPCA NPDES stormwater permit application if greater than 5 acres disturbed (threshold will change to 1 acre),
- Documentation that stormwater facilities will be maintained by the City or another party,
- Geotechnical soil boring results if available,

- Identification of Ordinary High Water (OHW) and shoreland zone for streams and lakes (300' from stream and 1000' from lake),
- Location of all on-site septic treatment systems,
- Identification of all private wells.

Stormwater Management

Quantity

Plans must include drainage areas, direction of runoff, and computations for runoff before and after development, and with peak control. Development in the Elm Creek watershed shall not alter the peak discharge and timing of runoff resulting from a 2-, 10-, and 100-year rainfall event of the critical duration for that subwatershed. This requirement applies to developments that propose to change the 1990 Land Use Plan, as approved in the Management Plan.

Identify the waterway or lake that the site will discharge to.

Quality

- For all new residential development, platting or replatting, of 5 acres or more and having a density equal to or greater than 1 unit per acre and all new commercial and industrial development larger than 1 acre, **within a critical lake drainage basin** (Elm Creek Watershed Management Plan, Chapter VIII, pp. 1-35) shall treat stormwater runoff to at least the Nationwide Urban Runoff Program (NURP) design criteria for wet detention ponds.
- A water quality protection plan, prepared by a qualified individual, shall delineate and identify drainage areas based on the elevations proposed in the grading plan and the proposed stormwater conveyance system for each area. The plan shall include details for all best management practices proposed for treatment of runoff from the site. The plan shall also include a schedule of implementation for the proposed treatment practices.
- For sites where NURP or other ponds are required or are used for water quality treatment, a detailed plan and sizing computations for the pond must be submitted along with outlet details, normal water and high water elevations, bench slopes and average depth.
    - All residential development ponds will be sized to hold 0.5 inches of runoff from the entire watershed,
    - All commercial/industrial development ponds will be sized to hold 2.5 inches of runoff from the impervious portion of the development.

In addition to the exhibits listed above and required under Erosion and Sediment Control, the following must be included with the plans:

- Delineation of the subwatershed contributing runoff from off-site and proposed and existing subwatersheds on-site.
- Proposed and existing stormwater conveyance systems including location, alignment and elevation.
- Existing and proposed 100-year water elevations on site.
- Identification, description, permeability and approximate delineation of site soils in both existing and proposed as-developed conditions, for applications proposing infiltration as a stormwater management practice.
- Construction plans and specifications of all proposed stormwater management facilities
- Stormwater runoff volume and rate analyses for the 2-, 10- and 100-year critical events, existing and proposed conditions, with peak control.
- All hydrologic, water quality and hydraulic computations completed to design the proposed stormwater management facilities.
- For stormwater treatment ponds, contour and primary and emergency outlet details, normal and high water levels (NWL and HWL).
- Delineation of any flowage easements or other property interests dedicated to stormwater management purposes, including, but not limited to, county or judicial ditches.

Wetlands

The Commission is the Local Governmental Unit for administering the Wetland Conservation Act (WCA) for the municipalities of Corcoran and Champlin, and Hassan Township. If wetland alteration is proposed, request a copy of the Commission's WCA requirements and fees.

- A wetland delineation report must be submitted for projects in the above municipalities before the final plat stage. Wetland delineations must be completed May 1 to October 31.
- Exemption and no-loss certificates are required for all exempt activities.
- A wetland replacement plan is required for any non-exempt filling or draining.

Floodplain Alteration

Any fill within the mapped 100-year flood plains and upland storage areas must be mitigated on a 1:1 volume basis. If any fill is proposed, a mitigation plan must be submitted which shows location, proposed and existing elevations and earthwork cut-and-fill volumes for the filled and mitigation areas. An as-built survey must be submitted showing that the project has fulfilled the mitigation requirements. Any fill or floodplain alteration must not change the flood stage or the timing of the flood.

Drainage Alteration

For any proposed culvert or bridge installation or replacement in waterways, submit plans showing the following (the Commission has to comment on activities proposed in or near DNR protected waters through DNR permit review process):

- Location of installation
- Diameter, length and type of culvert, proposed invert elevations, bridge details, etc.
- For replacements also include existing bridge details, culvert diameter, length, type and invert elevations
- Hydrologic computations

Pond Excavation (wildlife pond)

Submit Combined Project Notification Form and include drawing of proposed pond, depth, and location on site and location where dredge spoils will be disposed.

Water Appropriation

A permit is required for appropriation of waters for non-essential uses. (Request separate permit form)

Technical Advisor	Administrative Office
Elm Creek Watershed Management Commission **c/o Hennepin Conservation District** **6900 Wedgwood Road, Suite 140** **Maple Grove, MN 55311-3176**	**Judie A. Anderson** **3235 Fernbrook Lane** **Plymouth, MN 55447**
Phone: 763-420-2157 **Fax: 763-494-3176** **Email: ali@hcd.hennepin.mn.us**	**Phone: 763-553-1144** **Fax: 763-553-9326** **Email: judie@jass.biz**

Elm Creek Watershed Management Commission
Project Review Fee Schedule and Worksheet

I.	No applications will be reviewed until the Commission receives a completed application form, all appropriate materials, and fees.						**Amount Due**
II.	**Application Fee**						**$ 50.00**
III.	**Project Reviews[1]**						
	A.	**Grading and Erosion Control**					
		1	Residential development or redevelopment >1.0 acre				
			a	>1.0 - 5.0 acres	250		
			b	>5.0 - 10.0 acres	500		
			c	PLUS each additional five acres or fraction thereof	100	5,000 maximum	
		2	Commercial/industrial/institutional/governmental agency development project				
			a	≤ 1.0 acres	250		
			b	>1.0 - 5.0 acres	500		
			c	PLUS each additional five acres or fraction thereof	250	5,000 maximum	
		3	Commercial/industrial/institutional/governmental agency redevelopment project resulting in				
			disturbance of >1.0 acre or increase in impervious area [2] of >0.5 acre)				
			a	≤ 1.0 acres of disturbance	250		
			b	>1.0 - 5.0 acres of disturbance	500		
			c	PLUS each additional five acres or fraction thereof of disturbance	250	2,500 maximum	
	B.	**Water Quantity and Quality**					
		1	Residential development or redevelopment on site ≥8 acres with density[3] of <2 units per acre				
			a	8.0-10.0 acres	250		
			b.	PLUS each additional five acres or fraction thereof	150	2,500 maximum	
		2	Residential development or redevelopment on site >5 acres with density of >2 units per acre				
			a	5.0-10.0 acres	500		
			b	PLUS each additional five acres or fraction thereof	250	5,000 maximum	
		3	Commercial/industrial/institutional/governmental agency development on site ≥ 1.0 acre				
			a	1.0-5.0 acres	500		
			b	PLUS each additional one acre or fraction thereof	300	10,000 maximum	
		4	Commercial/industrial/institutional/governmental agency redevelopment on site ≥ 1.0 acre,				
			resulting in net increase in new impervious area >0.5 acre				
			a	0.5 - 1.0 acre increase in new impervious area	250		
			b	1.0 - 5.0 acre increase in new impervious area	500		
			c	PLUS each additional one acre of new impervious area or fraction thereof	300	10,000 maximum	
		5	Trail, road, street or highway project resulting in a net increase in new impervious surface area >1.0 acre				
			a	1.0 - 1.99 acres new impervious surface	500		
			b	PLUS each additional one acre or fraction thereof	250	5,000 maximum	
	C.	**Developments with mapped floodplains on site**					
		1	No impact or impacts ≤ 100 cubic yards		100		
		2	Impacts > 100 cubic yards		500		
	D.	**Drainage alterations** - Any culvert installation or replacement, bridge construction, stream cross-section alteration,					
		or activity requiring a DNR Waters Permit					
		1	on Elm, Rush, North Fork Rush, or Diamond Creeks		500		
		2	on all other tributaries within the watershed		100		
	E.	**Water appropriation permits (two years)**			50		
IV	**Wetland Project Fees**						
	F.	Wetland fees apply in the communities (Champlin, Corcoran and Hassan Township) where the Commission					
		is the LGU for the Wetland Conservation Act (WCA) and are in addition to the project fees.					
		1	Exemption certificates		100		
		2	Determinations		100		
		3	Delineation review		250		
		4	Pond Excavations		100		
		5	Wetland replacement plans <10,000 SF impact on single basins or <1/4 acre impact for private driveways		400		
		6	All other replacement plans		2,500		
		7	Replacement plan in conjunction with wetland banking		3,500		
			a	All other wetland banking applications	3,500		
		Additional wetland replacement plan and banking application escrows and sureties are determined					
		on a site-specific basis. (See page 3.)					
V.	**Failure to make application and receive approval prior to beginning work results in doubling of fees**						
						Total fees	*1*
						Double fees if V. applies	*2*
						Total due (Line *1* *or* *2*)	

[1] **The following projects require review:** Any residential project >1.0 acre; any commercial/industrial/institutional project; any project where there are floodplains or drainage alterations; any project with wetlands in a community where the Commission Statutory reviews are exempt from review fees.

[2] Impervious area includes any compacted gravel surface such as road shoulders, parking lots and storage areas.

[3] **Density** = number of units per buildable area prior to development. **Building area** = area excluding wetlands and floodplains. Rights-of-way are included in buildable area. Acreage is based on total lot size unless noted.

Elm Creek Watershed Management Commission
Request for Plan Review and Approval

Administrative Office
3235 Fernbrook Lane
Plymouth, MN 55447
Ph: 763-553-1144
Fax: 763-553-9326
Email: judie@jass.biz

Date:_____

Fee Submitted: $_____

*Please **Print** Clearly*

Applicant:_____

Address:_____

City:_____ Zip Code:_____

Phone: ( )_____ Fax: ( )_____ Email:_____

Agent:_____

Address:_____

City:_____ Zip Code:_____

Phone: ( )_____ Fax: ( )_____ Email:_____

Application for Approval of: *(check all the applicable items)*

☐	Residential Development	☐	Road Construction	☐	WCA Exemption Certificate
☐	Commercial/Industrial Development	☐	Wetland Determination	☐	Wetland Replacement Plan
☐	Floodplain Alteration	☐	Wetland Delineation	☐	Wetland Banking Application
☐	Drainage Alteration	☐	Wetland Alteration	☐	Pond Excavation
☐	Other (explain): _____	☐	**Issuance of General Permit**		

Project Name:_____

Project Location - City or Town:_____ PID#:_____

Total Acres:_____ Acres Disturbed:_____

Acres Impervious Before Development:_____

Acres Impervious After Development (incl. gravel roads and parking areas):_____

For Residential Developments: Number of Lots:_____ Lot Density:_____

Anticipated Project Start Date:_____

Remarks:_____

_____

Applicant's Signature:

Print Name:_____ **x**_____

In order for a project to be considered by the Commission, a complete application packet must be received in the Commission's administrative office at least TEN BUSINESS DAYS prior to the Commission's next regular meeting. Action by the Commission will be predicated on factors such as completeness of the application documents and complexity of the project, etc. The Commission normally meets on the second Wednesday of the month.

Submit this form to the City along with three copies of the required plans and the appropriate fee (check made payable to "Elm Creek Watershed Management Commission"). The City will forward two copies and the fee payment to the Commission. The Commission will transmit a letter to the applicant following approval. For submittal requirements, see the Commission Plan Review Requirements packet. A copy of this form and the fee schedule can be downloaded from: http://www.elmcreekwatershed.org/projrb.shtml

WATERSHED MANAGEMENT COMMISSIONS

3235 FERNBROOK LANE • PLYMOUTH, MN 55447
(763) 553-1144 • FAX (763) 553-9326

- Exhibit A - *- Exhibit A -*

Fee Schedule

This fee schedule is adopted in accordance with Rule J of the Rules and Standards of the Shingle Creek and West Mississippi Watershed Management Commissions. ***It is effective January 1, 2006.***

Project Review Fees

Single Family Lot $300

Single Family Residential Development, density less than 3 units per acre
- Total Site <15 acres $1,250
- Total Site 15-29.99 acres $1,500
- Total Site ≥30 acres $2,000

All Other Development
- Total Site <5 acres $1,250
- Total Site 5-9.99 acres $1,500
- Total Site 10-19.99 acres $2,000
- Total Site ≥20 acres $3,000

Variance Escrow $2,000

Street/Highway/Utility Project $1,000

Note: Total site area includes wetland, buffer, right of way and other nondeveloped areas.

Wetland Fees

Wetland Delineation Review $300

Wetland Replacement Plan Escrow $1,500

Monitoring and Reporting Deposit $1,500

Wetland Replacement Deposit ..... Varies

J:\Shingle Creek\Projects\Project Review Fees\Review Fees_2006_ExhibitA.wpd

SHINGLE CREEK WATERSHED MANAGEMENT COMMISSION

PROJECT REVIEW APPLICATION

(For Office Use Only)

Application No. _____

Date Received _____

OWNER

Name _____

_____

_____

Address _____

_____

_____

Phone _____

NATURE OF REVIEW

☐ Wetland Alteration
(DNR Protected or WCA Regulated with Commission Designated LGU)

☐ Floodplain Alteration

☐ Stormwater Management Plan
(Sites >5 acres for non-single family or >15 acres for single family detached)

☐ Other _____

_____

PROJECT INFORMATION

Name _____

Location _____

_____

_____

Area of Property _____ Acres

Project Description _____

_____

Fees

☐ Project review fee $_____

☐ $2,000 escrow for variance application

☐ $1,500 escrow for wetland replacement plan when Commission is LGU

Project Engineer

Name _____

Company _____

Phone _____

Fax _____

AUTHORIZATION - To be completed by City

Requested by City of _____

Signature _____

Name _____

Title _____

Date _____

Send completed application to:

Shingle Creek Watershed Management Commission
c/o Wenck Associates, Inc.
1800 Pioneer Creek Center
PO Box 249
Maple Plain, MN 55359-0249 Ph: 763-479-4200
Fax: 763-479-4242

Include with application grading plan with erosion control, stormwater calculations, fees or escrows, mitigation plans, and other related information.

WEST MISSISSIPPI WATERSHED MANAGEMENT COMMISSION

PROJECT REVIEW APPLICATION

(For Office Use Only)

Application No. _____

Date Received _____

OWNER

Name _____

_____

_____

Address _____

_____

_____

Phone _____

NATURE OF REVIEW

☐ Wetland Alteration
(DNR Protected or WCA Regulated with Commission Designated LGU)

☐ Floodplain Alteration

☐ Stormwater Management Plan
(Sites >5 acres for non-single family or >15 acres for single family detached)

☐ Other _____

_____

Fees

☐ Project review fee $_____

☐ $2,000 escrow for variance application

☐ $1,500 escrow for wetland replacement plan when Commission is LGU

PROJECT INFORMATION

Name _____

Location _____

_____

_____

Area of Property _____Acres

Project Engineer

Name _____

Company _____

Phone _____

Fax _____

Project Description _____

_____

AUTHORIZATION - To be completed by City

Requested by City of _____

Signature _____

Name _____

Title _____

Date _____

Send completed application to:

West Mississippi Watershed Management Commission
c/o Wenck Associates, Inc.
1800 Pioneer Creek Center
PO Box 249
Maple Plain, MN 55359-0249 Ph: 763-479-4200
Fax: 763-479-4242

Include with application grading plan with erosion control, stormwater calculations, fees or escrows, mitigation plans, and other related information.

ENGINEERING REQUIREMENTS
FOR
INDUSTRIAL/COMMERCIAL DEVELOPMENT

1. STREETS AND PARKING LOTS

A. All parking lots and driveways shall be constructed to a 7-ton pavement design, unless the pavement is subjected to truck traffic, and then shall be constructed to a 9-ton design. The minimum bituminous surfacing thickness shall be 3 inches for a 7-ton design and 4 ½ inches for a 9-ton design. The pavement shall be placed in 2 lifts minimum. The first lift shall be 2331 base course. The final lift shall be 2341 wear course.

B. Aggregate base shall be Class 5 or an approved equal. The thickness required for a 7-ton design shall be 6 inches, and 8 inches for a 9-ton design. This is based on A-6 soils with a R-value of 15. The aggregate base may be modified with the City Engineer's approval, if an acceptable soils report is provided by the developer certifying a higher R-value.

C. Poured in place concrete curb and gutter shall bound all parking lot and driveway areas (pin curb not allowed). Bituminous curb will only be allowed where a parking lot or driveway is temporary or will be expanded in the near future. A minimum of 2 inches of gravel or sand shall be installed below curb and gutter.

D. All driveways shall be constructed with a concrete apron pursuant to Plate No. 5207.

E. Safety islands shall be constructed at the end of all parking lot tiers and be bound by concrete curb and gutter. The minimum island width shall be 4 feet, measured from face-to-face of curb.

F. The parking lot and driveways should be detailed in regard to drainage patterns, and should show specific spot elevations along the gutter lines and other areas where appropriate.

G. Sidewalk abutting the parking lot or driveway shall be separated by concrete curb and gutter with an expansion joint.

2. STORM SEWER

A. All parking lot and driveway areas must have internal storm drainage collected by a catch basin-pipe system, unless unable to do so, as determined by the City Engineer.

B. There are three types of storm sewer pipe allowed in the City of Maple Grove and they are reinforced concrete, smooth bore H.D.P.E. PVC and dual-wall polyethylene

pipe with a smooth interior surface. The minimum concrete pipe size allowed is 15 inches in diameter. The minimum PVC pipe size for parking lot drainage shall be 12 inches in diameter. If PVC pipe is used, a rubber O-ring gasket or approved boot shall be located where the pipe connects to the manhole. The storm sewer pipe must be installed to the current Standard Specifications for Utility and Street Construction.

C. Catch basins should be constructed such that the casting is installed integral with the concrete curb and gutter, unless otherwise approved by the City. The castings used shall be Neenah R-3067, with surmountable curb and gutter and Neenah R-4342 for off road locations. Catch basin manholes shall be constructed per Plat No. 3101, and standard catch basins per Plate No. 3102.

D. Storm sewer pipe discharging into ditches, storm ponds, lakes, wetlands, etc. should have flared end sections placed at the end of pipe with trash guards and grouted rip-rap per Plate No. 3110.

3. GRADING

A. Erosion control measures should be shown on the site plan and be approved by the Engineering Department prior to beginning grading operations. If grading is to take place prior to building permit issuance, a permit is required from the Engineering Department.

B. Geotextile fabric shall be used on steep grades, around catch basins, etc. The type and location of the fabric should be shown on the site plan.

C. The developer/builder will be responsible to protect existing waters and/or storm systems from sedimentation. Failure to do so will require the developer/builder to clean up the sediment or the City may draw upon the surety to correct the situation.

D. An on-site temporary or permanent sedimentation pond will be required where deemed necessary by the City Engineer.

4. SANITARY SEWER AND WATER SERVICES

A. All utility connection charges must be paid prior to issuance of the water meter. The connection charge amount will be given to the builder at the time of building permit issuance.

B. Sanitary sewer and water services should be shown on the site plan in detail. Information such as the size and type of service, invert and riser elevations, type of castings, etc. should be shown on the site plan.

C. Watermain can be constructed using ductile iron pipe, PVC pressure pipe conforming to AWWA C900, or H.D.P.E. pipe. Ductile iron pipe shall be encased with a polyethylene film conforming to ASTM D1248-889.

D. All utility construction shall be done in accordance with Maple Grove's Standard Specifications for Street and Utility Construction.

E. It will be the site plan preparer's responsibility to obtain information on existing utility locations from the City and relate this information to the bidders of the project and/or contractor constructing said services.

F. Post indicator valves should only be used on fire services, or placed after the connection for domestic water usage.

5. GENERAL REQUIREMENTS

A. If public streets and utilities are required to serve the proposed site, the improvements must be installed by the City of Maple Grove. A surety in the amount of 40% of the estimated construction costs will be necessary to guarantee the payment of special assessments.

B. The developer will be required to enter into a performance agreement (and/or a development agreement if City improvements are necessary) prior to issuance of the building permit.

C. If there are conditions of approval when the site plan is approved by City Council, the appropriate changes must be made to the site plan prior to building permit issuance.

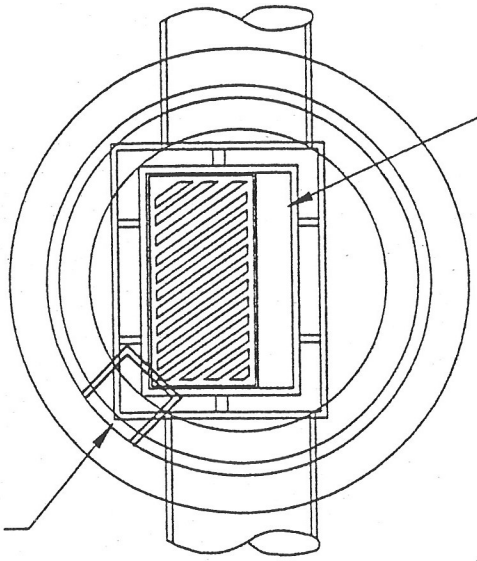

PLAN

24"x36" slab opening for Neenah R3067 or equal

Dimension from back of curb to center of pipe.
4' Dia. MH – 9" in from Back of Curb
5' Dia. MH – 3" in from Back of Curb
6' Dia. MH – 3" behind Back of Curb
7' Dia. MH – 9" behind Back of Curb
8' Dia. MH – 15" behind Back of Curb

Neenah R3067 casting or equal
Neenah R3290A if in a Driveway
Neenah R4342 (beehive) for off road locations

Minimum of 2 maximum of 6 concrete adjustment rings with full bed of mortar between each.

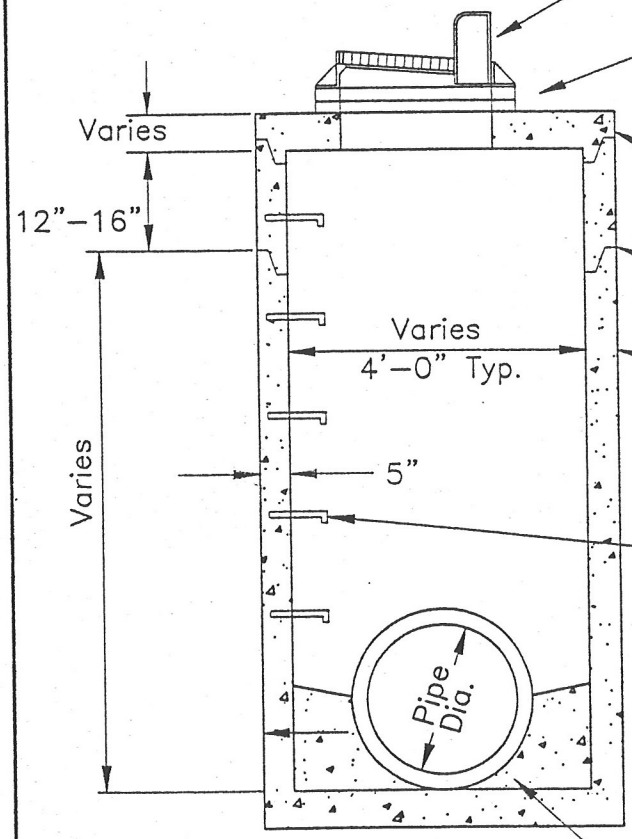

Precast reinforced concrete slab with "O" ring rubber gasket

All joints in manhole to have "O" ring rubber gaskets.

Precast concrete section

Doghouses shall be grouted on both the outside and inside.

Manhole steps, Neenah R1981N or equal, 16" on center. Copolyer Polypropylene plastic (PSI–PF) and Aluminum steps approved.
Steps to be aligned over street side corner of catch basin frame.

Minimum slab thickness, 6" for 14' depth. Increase thickness 1" for each 4' of depth greater than 14', and reinforce with 6"x6" 10/10 mesh.

SECTION

Grout bottom to 1/2 dia. of pipe

City of MAPLE GROVE	CATCHBASIN MANHOLE

Last Revision: Feb. 1997		Plate No. 3101

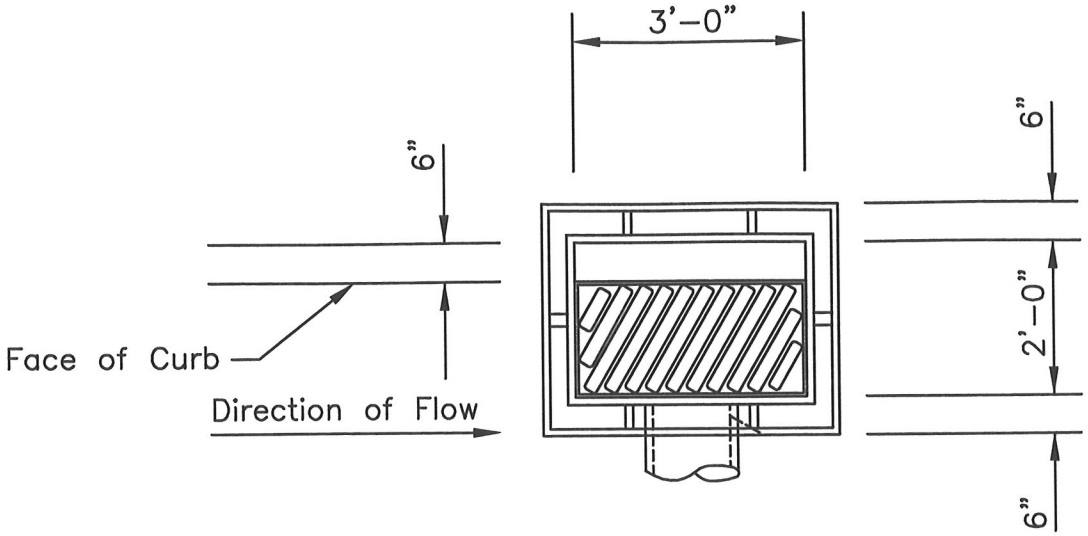

PLAN

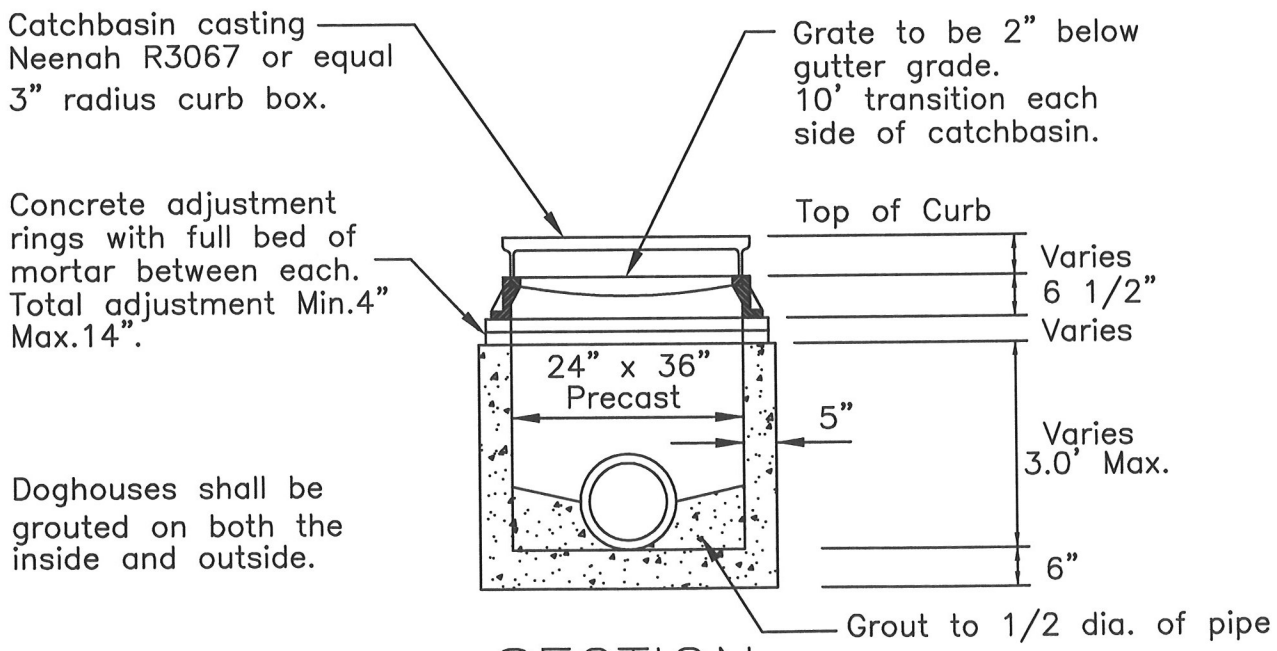

SECTION

NOT TO SCALE

S:\AV_DATA\TIFF\Leaftext.tif

ENGINEERING DEPARTMENT (763) 494-6350

CATCH BASIN
2' x 3' RECTANGULAR

Last Revision		Plate Number
April 1999		3102

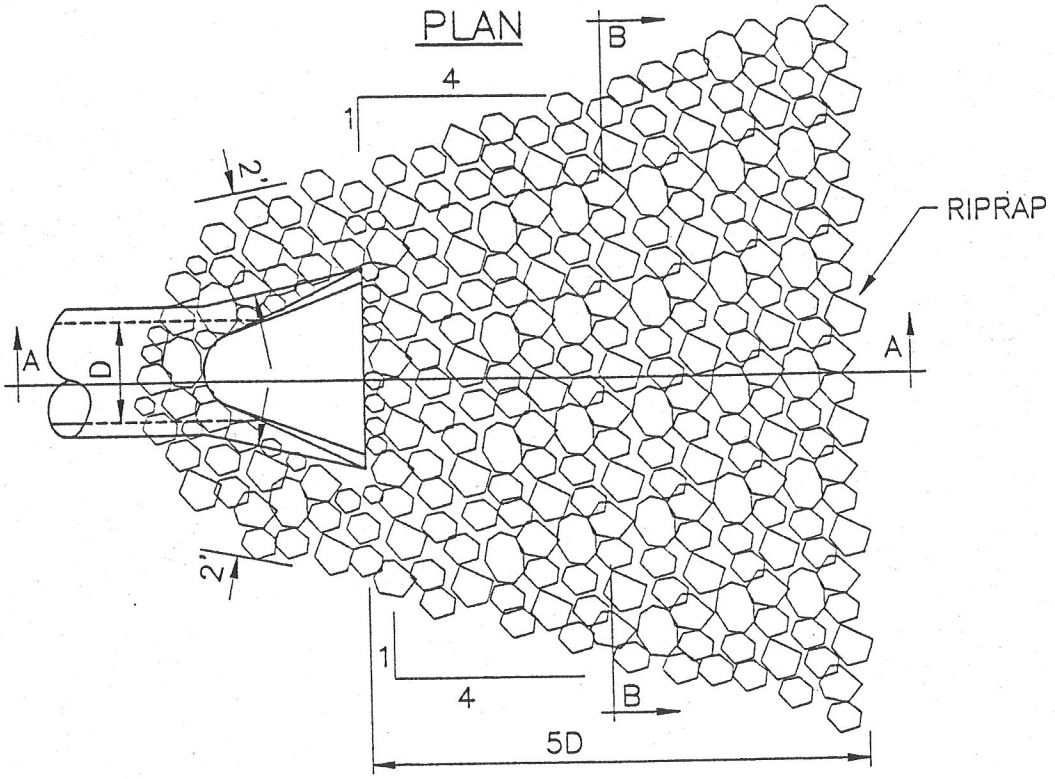

RIPRAP Rquirements – 1' Thick		Filter Blanket	Geotextile Filter Type III
12" TO 24"	5 to 8 CY CL.2	2 to 2.5 CY	5 to 8 SY
27" TO 33"	9 to 13 CY CL.3	3 to 6 CY	9 to 13 SY
36" TO 48"	15 to 25 CY CL.3	4.4 to 6.7 CY	15 to 25 SY
54" AND UP	41 CY and up CL.4	7.9 to 20 CY	41 and up SY

(One cubic yard is approximately 2,800 lbs.)

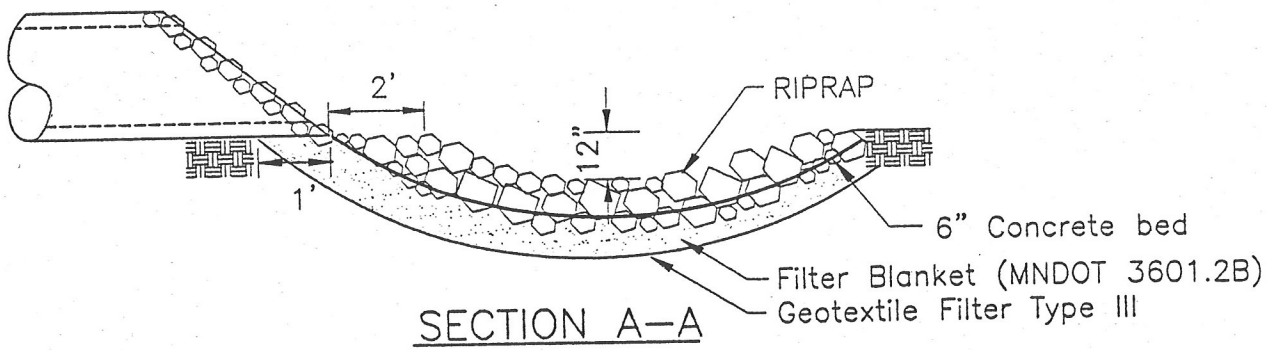

SECTION A–A

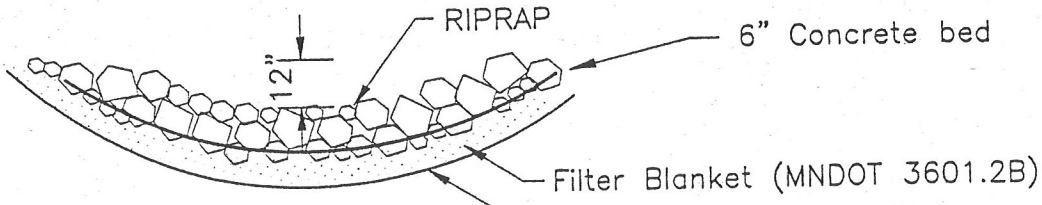

SECTION B–B

City of MAPLE GROVE

FLARED END SECTION WITH GROUTED RIP RAP

Last Revision: Feb. 1997

Plate No. 3110

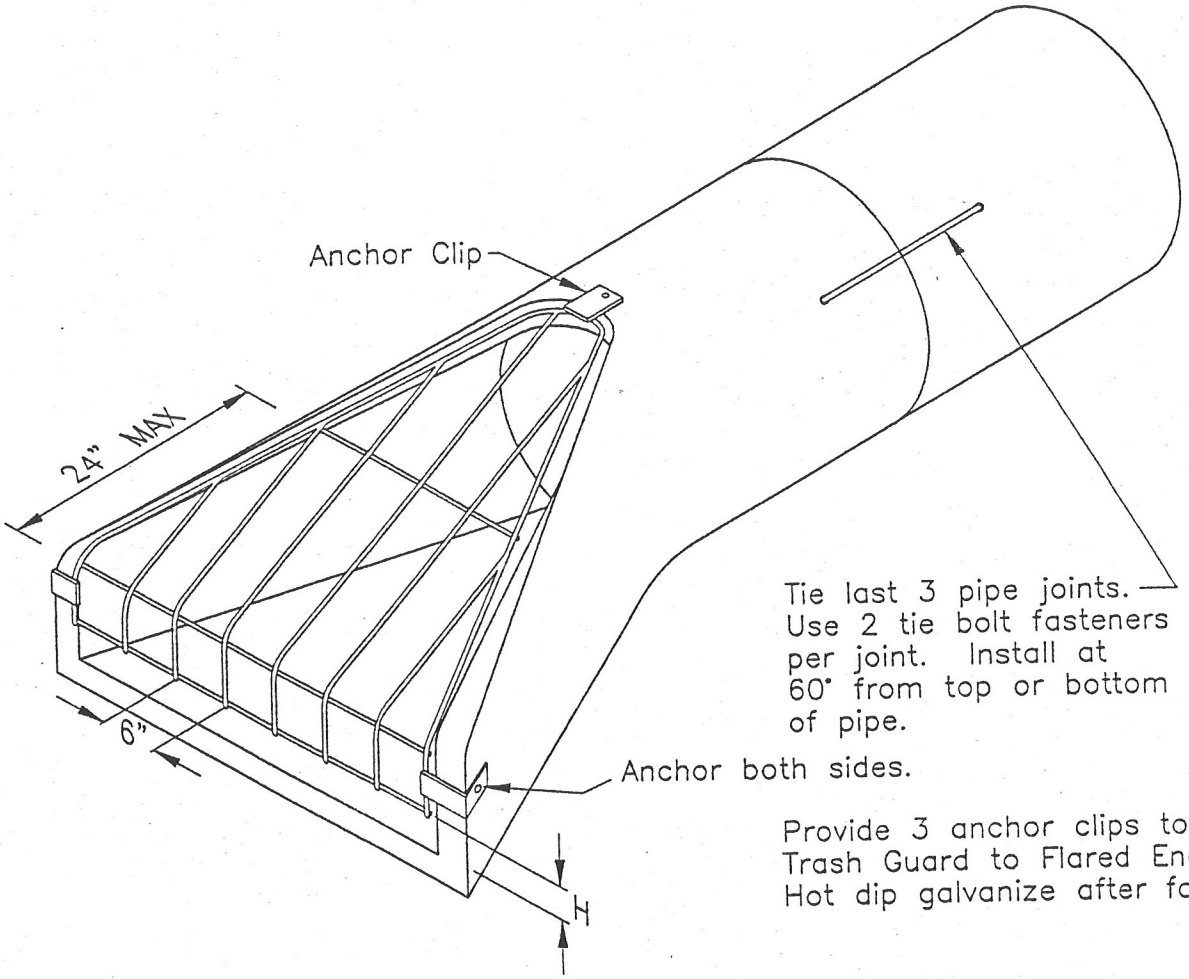

Provide 3 anchor clips to fasten Trash Guard to Flared End Section. Hot dip galvanize after fabrication.

ISOMETRIC

TRASH GUARD SIZING

Pipe Size	Bars	'H'	Bolts
12"–18"	5/8"ø	6"	5/8"
21"–42"	3/4"ø	6"	3/4"
48"–72"	1"ø	12"	1"

City of MAPLE GROVE

FLARED END SECTION WITH TRASH GUARD

Last Revision: Feb. 1997

Plate No. 3110 A

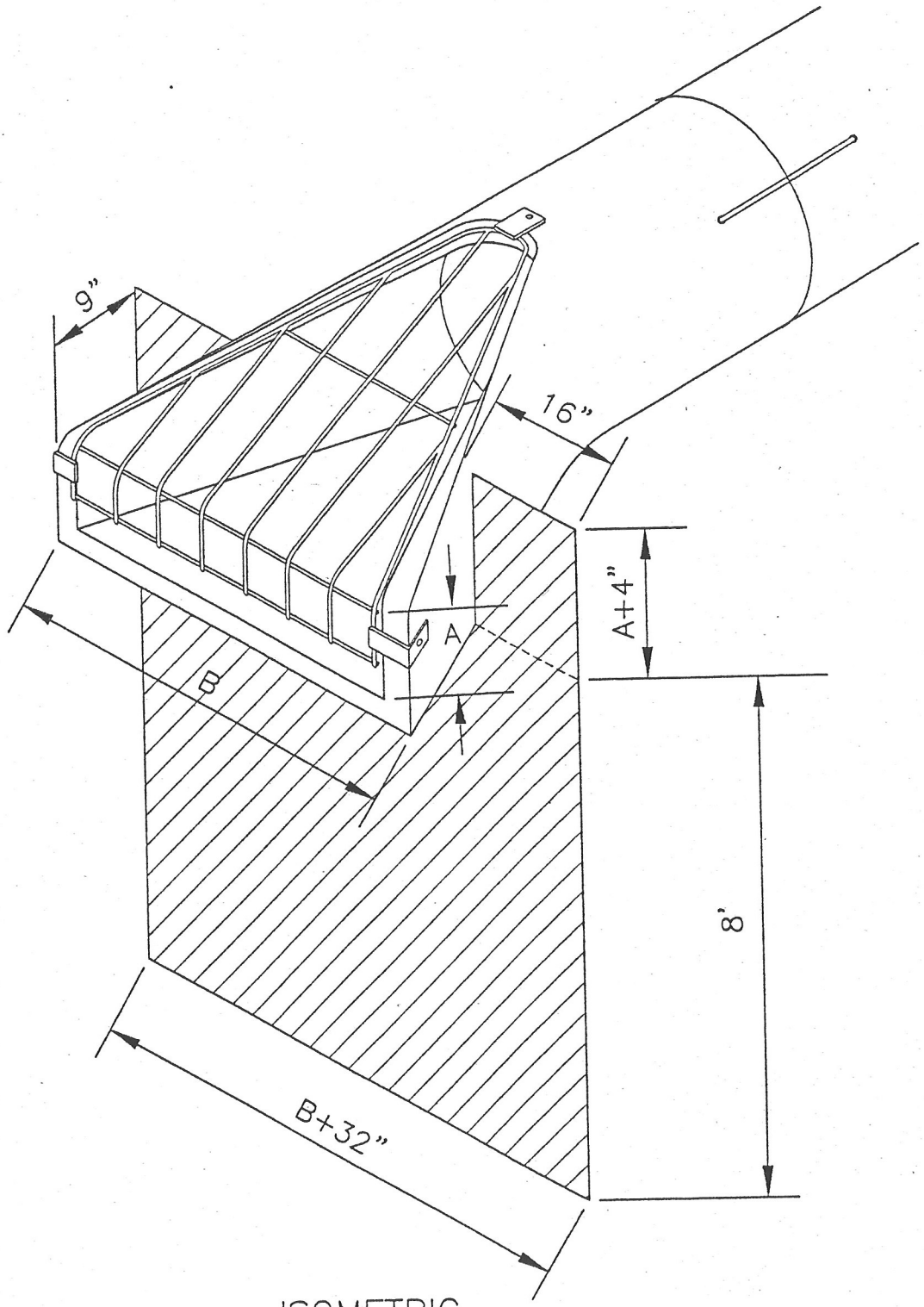

ISOMETRIC

City of
MAPLE GROVE

FLARED END SECTION
WITH STEEL SHEETING

Last Revision:
Feb. 1997

Plate No.
3110 B

Concrete slab shall be 6" thick,
reinforced with 6/6 welded wire fabric
or 8" thick non-reinforced,
on 4" compacted class 5 gravel base.

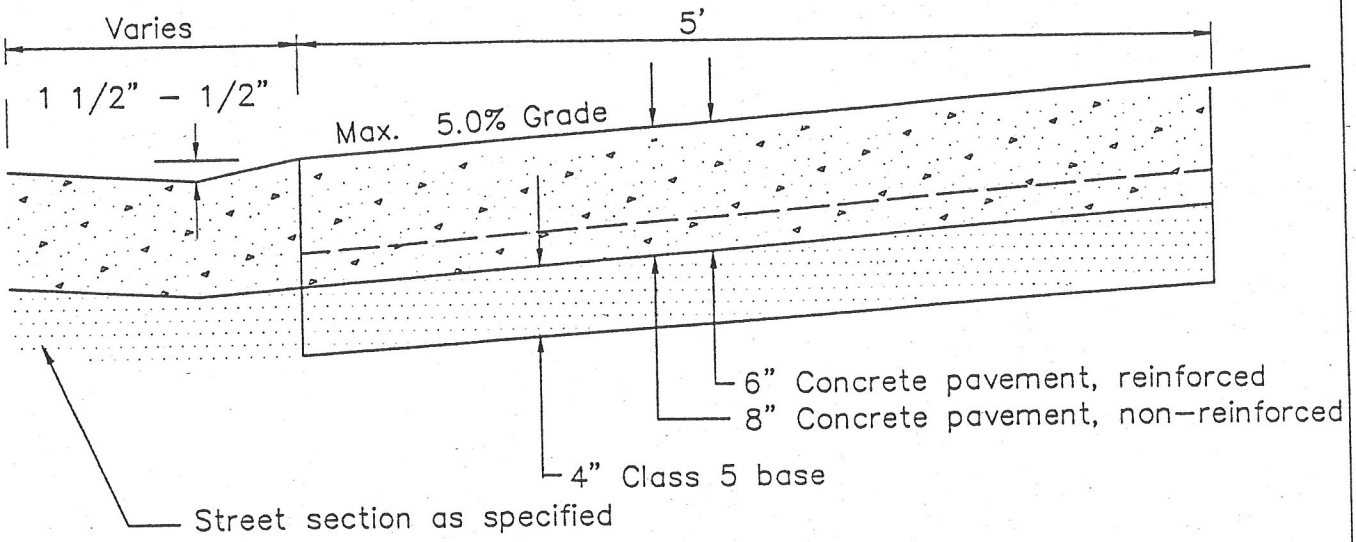

SECTION A–A

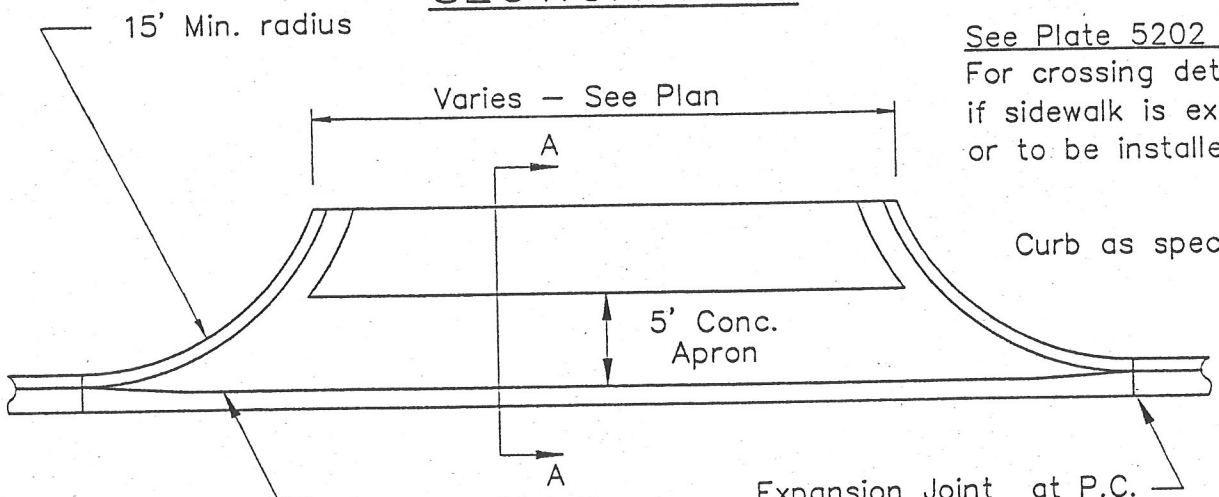

See Plate 5202
For crossing details
if sidewalk is existing
or to be installed.

Curb as specified.

PLAN

City of MAPLE GROVE	INDUSTRIAL / COMMERICAL DRIVEWAY APRON	
Last Revision: Feb. 1997		Plate No. 5207

STANDARD INSTALATION
REGULAR FLOW

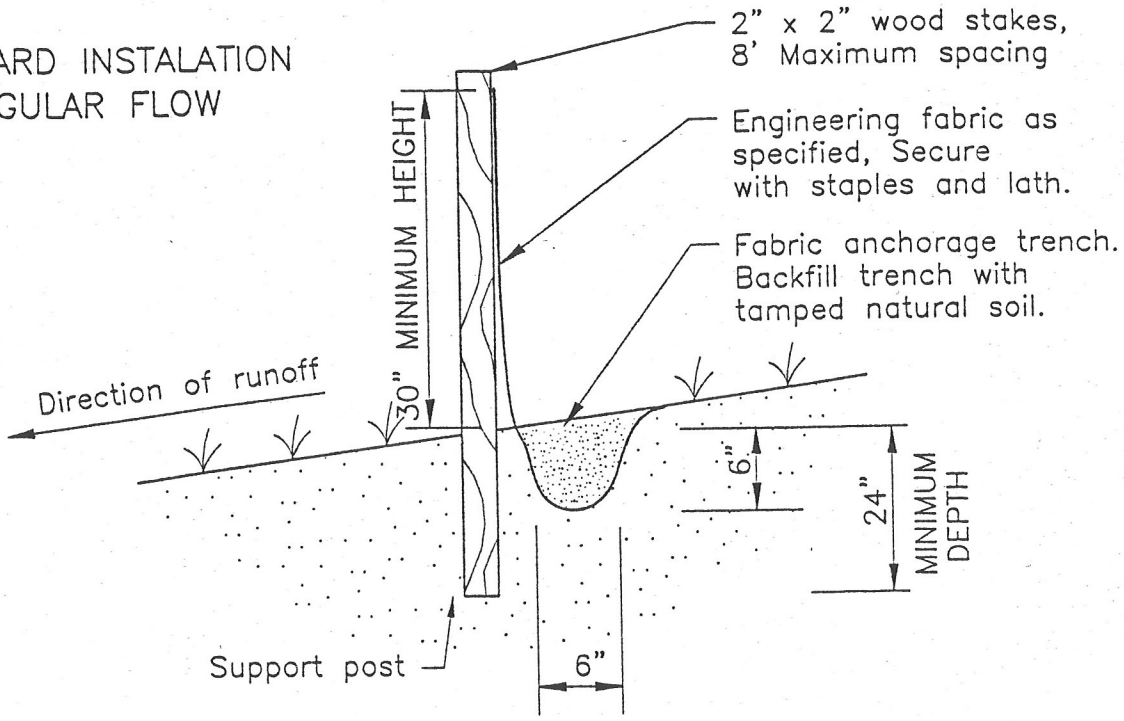

HEAVY DUTY
HIGH FLOW AREAS

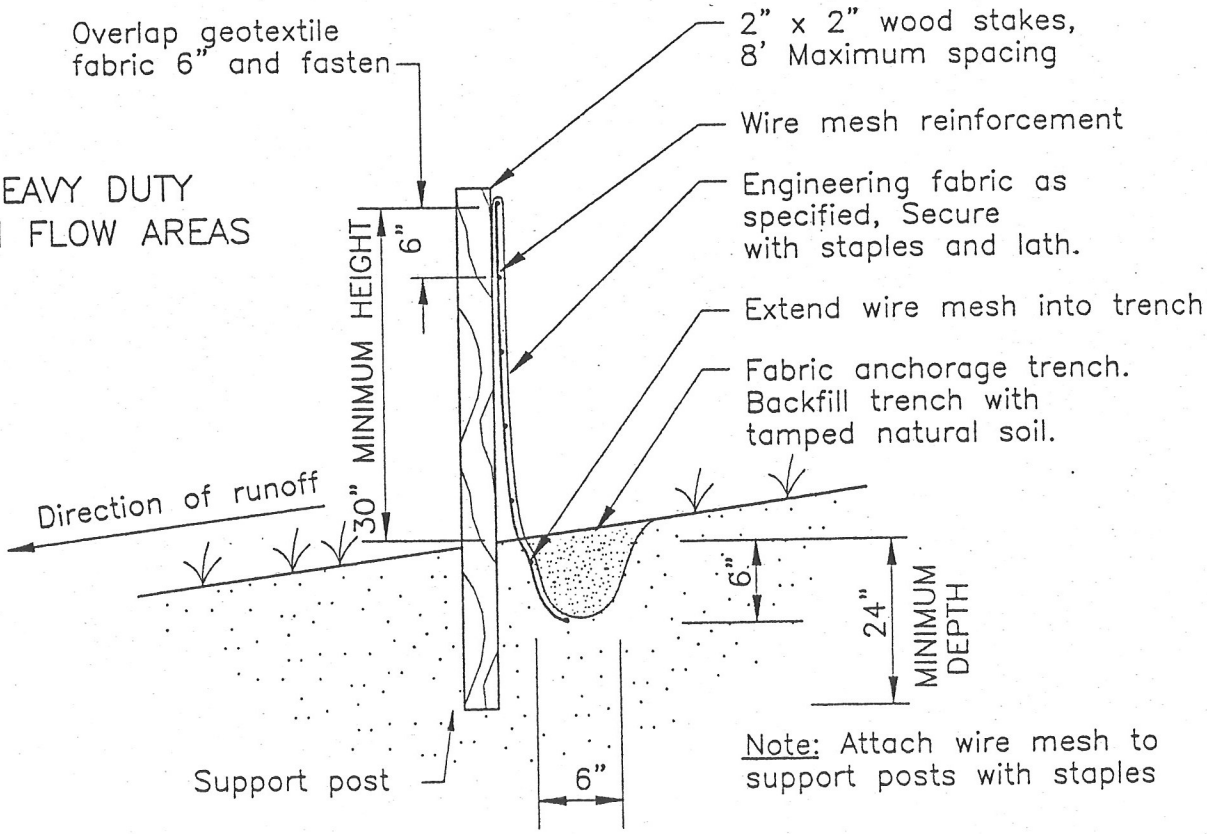

Note: Attach wire mesh to support posts with staples

City of
MAPLE GROVE

SILT FENCE

Last Revision: Feb. 1997		Plate No. 5212

City of Maple Grove
Parks & Recreation Board
12951 Weaver Lake Rd • Maple Grove MN 55369-9409
Phone: (763) 494-6500 Fax: (763) 494-6454

Dear Owners and/or Developers:

Pursuant to Minnesota laws and City Comprehensive Park Plan, the City of Maple Grove requires all owners or developers to convey to the City, or dedicate to the public for park or playground purposes, a reasonable portion of the area being platted, subdivided or developed as specified in Section 30:18 of the Maple Grove Subdivision Ordinance as a prerequisite to approval of a plat, subdivision or development of any land.

In lieu of the aforementioned requirements, and with proper consideration of the City's Comprehensive Park Plan, the owners or developers are required to pay to the City an equivalent amount in cash based upon the undeveloped land value of that portion of said land that would have otherwise been required to be dedicated for use in the acquisition of public parks and playgrounds, development of existing public park and playground sites and for debt retirement in connection with land previously required for public parks and playgrounds.

The form of contribution (cash or land or any combination) shall be decided by the City based upon the requirements of this ordinance, need and conformance with approved City plans.

Correspondingly, as part of the City's plat, subdivision and development process, you are required to contact the Parks and Recreation Director to fully review your proposal and discuss in detail the requirements of the Subdivision Ordinance Section 30:18 pertaining to Parks and Recreation.

To meet this requirement, contact Chuck Stifter, Park Planner at 763-494-6503 to schedule a meeting. This requirement must be fulfilled at least 28 days prior to the Planning Commission meeting and before the preparation of plans for submission of the application for preliminary plat approval.

Thank you for your cooperation on this matter.

Sincerely,

Terry Just, Director
Parks and Recreation Board

"Serving Today, Shaping Tomorrow"

Timothy Phenow, Chairman
Douglas Anderson, Board Member
John M. Ferm, Board Member
Pat Hoffman, Board Member
Sally Mainquist, Board Member

"T", Tree Preservation Plan Submittal

To aid in the assessment of development-related impacts to trees located within the "T" District, the City requires the applicant to provide plans in the format below. Staff finds that the format is useful not only for City review but also for planning purposes. Please familiarize yourself with the provisions of the Tree Preservation District Standards, Section 36-721 through 36-733 of the Zoning Ordinance.

1. A separate proposed development plan should be overlaid with the legal boundary lines of the applicable tree districts(s).

2. The locations of all trees 8 inches in diameter or greater, within the "T" District boundary, shall be surveyed and accurately positioned on a development plan. Each tree should be assigned an *identifying number* or letter on the plan. This plan should also illustrate the *grading limits* within the tree district(s).

3. A table corresponding to each (if more than one within the development area) affected "T" District shall be provided clearly illustrating:

    a. The tree *number* corresponding to that as shown on the plan,
    b. the tree *type*,
    c. the tree *size*, and
    d. a notation indicating whether the tree is to be *saved* or *removed* during the subdivision process.

4. A second table should then be created that shows:

    a. The Tree Preservation District *number(s)*,
    b. the total *existing tree inches* within the district,
    c. the total *tree inches removed*,
    d. the *percentage of trees preserved*, and
    e. the amount, in total inches, of *trees to be replaced* (if necessary).

Data in similar form must be provided when individual certificates of survey are submitted to the City when building permits are being requested for each <u>affected</u> lot.

City of Maple Grove

Landscape Tree Suggestions

The following document is split into multiple sections. Native selections are listed first and grouped into three sizes, followed by non-native species. The species designated below as 'native' were identified from multiple references including the MN DNR. Native plants are best-adapted to the local environment, providing habitats for wildlife, especially birds and butterflies. Some natives produce nuts and fruits that both humans and wildlife can enjoy!

Additional information can be found on the Arbor Committee web site: ***www.ci.maple-grove.mn.us/arbor/arbpq1.htm***

Native Deciduous – small

	At Maturity				Tolerance to:			
Common Name (Latin)	**Height**	**Spread**	**Growth Rate**	**Light Preference**	**Salt**	**Wet**	**Drought**	**Comments & Notable Varieties**
1. Alder, Speckled *(Alnus rugosa)*	15-20'	15-20'	F	☼	L	H	L	Needs moist conditions. Improves soil fertility with nitrogen. Dark purple fruit persists on wood that turns orange in winter. Age 25-50 years.
2. Bladdernut, American *(Staphylea trifolia)*	10-15'	10-15'	M	☼	L	I	I	Interesting 1-2" seed pods. Yellow fall color.
3. Blue Beech *(Carpinus caroliniana)*	15-18'	15-20'	S	☼ ◐ ●	L	L	L	Also called American Hornbeam. Good fall color; interesting bark. Understory tree. Age 50-75 years.
4. Dogwood, Gray *(Cornus racemosa)*	8-12'	6-10'	M	☼ ◐ ●	L	H	L	White flowers, white fruit, purple-red fall color. May colonize.
5. Dogwood, Pagoda *(Cornus alternifolia)*	15-25'	20-25'	S	☼ ◐	L	I	L	White spring flowers; interesting horizontal branching pattern. Beneficial for butterflies.
6. Eastern Wahoo *(Euonymus atropurpurea)*	20-25'	10-15'	M	☼	L	H	I	Twigs have corky ridges or wings. Red fall color. Pinkish fruit. Age 25-50 years.

KEY:

Growth Rate:	F – Fast	M- Moderate	S- Slow
Light:	☼ Full Sun	◐ Part sun/part shade	● Shade
Tolerance:	H – High	I –Intermediate	L – Low

Common Name (Latin)	At Maturity Height	At Maturity Spread	Growth Rate	Light Preference	Tolerance to: Salt	Tolerance to: Wet	Tolerance to: Drought	Comments & Notable Varieties
7. Hawthorn, Cockspur *(Crataegus crusgalli)*	15-18'	20-25'	M	☼	I	L	H	Bright red fruit; Seek out thornless varieties. Deer usually avoid eating. Beneficial for butterflies. Age 50-100 years.
8. Ninebark, Common *(Physocarpus opulifolius)*	8-10'	8-10'	M	☼	I	L	I	Dense growth.
9. Serviceberry *(Amelanchier spp.)*	15-25'	10-15'	M	☼	H	H	L	White flowers in spring; good fall color. Very high wildlife value, bird magnet. Edible fruit. Consider Downy (*A. arborea*) or Allegheny (*A.laevis*) varieties.
10. Buffaloberry, Silver *(Shepherdia argentea)*	8-10'	8-10'	M	☼	I	H	L	Silvery, light green leaves. Berries in late summer.
11. Viburnum, Arrowwood *(Viburnum dentatum)*	6-8'	6-8'	M	☼ ◐ ●	I	L	I	Very shade tolerant. Also recommended varieties: Witherod Viburnum (*V. cassinoides*) or Mapleleaf Viburnum (*V. acerifolium*)
12. Viburnum, Nannberry *(Viburnum lentago)*	16-20'	10-20'	F	☼ ◐ ●	L	H	L	White flowers. Rose-pink fruit turns blue-black. Purple-red fall color. Edible fruit, but large central pit. Often along forest edges, swamps. Age 10-20 years.

Native Deciduous – medium

Common Name (Latin)	At Maturity Height	At Maturity Spread	Growth Rate	Light Preference	Tolerance to: Salt	Tolerance to: Wet	Tolerance to: Drought	Comments & Notable Varieties
1. Ironwood or Hophornbeam *(Ostrya virginiana)*	30-35'	25-30'	S	☼ ◐ ●	L	I	H	Tolerates wide range of soil/light conditions (grows faster in more sun). Attractive catkins resemble 'hops'. Holds leaves into winter. Age 75-100 years.
2. Linden, Littleleaf *(Tilia cordata)*	35-50'	20-30'	M	☼ ◐ ●	I	I	I	Excellent shade tree. Beneficial for bees and other wildlife.
3. Mulberry, Red *(Morus rubra)*	35-50'	35-50'	M	☼ ◐	L	H	I	Edible purple-red fruit. Golden yellow color in fall. Age 50-75 years.
4. Plum, American *(Prunus americana)*	20-35'	20-30'	F	☼	L	L	H	Produces sweet-spice scented white blooms. Edible fruit. Age 25-30 years.

KEY:

Growth Rate: F – Fast; M- Moderate; S- Slow

Light: ☼ Full Sun; ◐ Part sun/part shade; ● Shade

Tolerance: H – High; I –Intermediate; L – Low

ɹtive Deciduous – tall

Common Name (Latin)	At Maturity Height	At Maturity Spread	Growth Rate	Light Preference	Tolerance to: Salt	Tolerance to: Wet	Tolerance to: Drought	Comments
1. Aspen, Quaking *(Populus tremuloides)*	40-60'	20-30'	F	☼	M	H	L	Tolerates wide range of soils, avoid flooding. Bright yellow fall color. Age 60-80 years.
2. Birch, Paper *(Betula papyrifera)*	40-70'	20-40'	M	☼	I	H	L	Attractive white bark, yellow fall color. Choose insect-resistant cultivars. Age 80-100 years. Available in clump or single stem forms.
3. Birch, River *(Betula nigra)*	40-60'	30-40'	M	☼	I	H	L	Attractive bark. High wildlife value. Available in clump or single stem forms. Age 50-75 years.
4. Birch, Yellow *(Betula alleghaniensis)*	60'	30'	M	☼	L	I	L	Resistant to birch borer. Gorgeous fall yellow color. Age 100-125 years.
5. Butternut *(Juglans cinerea)*	40-60'	30-50'	M	☼	L	H	L	Gray bark color. Edible nuts. Age 80-100 years.
6. Cherry, Black *(Prunus serotina)*	50-60'	20-30'	S	☼ ◐	L	I	I	Found naturally along woodland edges. Edible fruit. Great wildlife value. Age 125-150 years
7. Cherry, Pin *(Prunus pensylvanica)*	20-35'	10-20'	M	☼	L	I	I	Attractive bark. Bright red-orange color in fall. Edible fruit. Great wildlife value. Age 20-40 yrs.
8. Coffeetree, Kentucky *(Gymnocladus dioicus)*	50-70'	30-50'	M	☼	H	I	H	Provides open shade; 4-8" long pods (female trees) create interest in winter. Age 50-75 years.
9. Hackberry *(Celtis occidentalis)*	40-60'	30-50'	M	☼ ◐ ●	I	I	H	Unique bark; adaptable. Persistent berries. High wildlife value. Age 100-150 years.
10. Hickory, Bitternut *(Carya cordiformis)*	50-75'	50-75'	S	☼ ◐	I	H	I	Yellow color in fall. Nuts produced are very bitter. Age 100-150 years.
11. Honey locust *(Gleditsia triacanthos)*	40-60'	40-60'	M	☼ ◐	H	L	H	Provides attractive "open" shade. Opt for thornless varieties: 'Moraine', 'Shademaster', or 'Skyline'. Age 100-125 years.
12. Linden *(Tilia Americana)*	50-75'	25-40'	F	☼ ◐ ●	L	H	I	Also called American Basswood. Excellent for larger sites. Age 150-200 years.
13. Maple, Red *(Acer rubrum)*	40-60'	30-50'	S	◐	L	H	L	Vivid fall color. Very high wildlife value. Often found in swamps/moist woods. Age 75-100 yrs.
14. Maple, Sugar *(Acer saccharum)*	40-60'	30-50'	M	☼ ◐ ●	L	L	L	Excellent fall color. Sap used for maple syrup. Leaves break down quickly. Age 150-200 years.
15. Oak, Bur *(Quercus macrocarpa)*	60-80'	60-80'	S	☼ ◐	I	I	I	Excellent tree for urban landscapes. Age 150-250 years. Edible acorns.

KEY:

Growth Rate: F – Fast M- Moderate S- Slow

Light: ☼ Full Sun ◐ Part sun/part shade ● Shade

Tolerance: H – High I –Intermediate L – Low

Common Name (Latin)	At Maturity Height	At Maturity Spread	Growth Rate	Light Preference	Tolerance to: Salt	Tolerance to: Wet	Tolerance to: Drought	Comments
16. Oak, Pin *(Quercus ellipsoidalis)*	50-70'	30-50'	M	☼	L	L	H	Good fall color; distinctive pyramid form. Good wildlife value. Age 100-150 years.
17. Oak, Northern Red *(Quercus rubra)*	60-80'	40-50'	M	☼ ◐	I	I	I	Withstands City conditions. Fast growth rate for oaks. Age 100-150 years.
18. Oak, Swamp White *(Quercus bicolor)*	40-60'	30-60'	M	☼ ◐	H	H	L	Quite adaptable. Unique bark. Holds leaves into winter. Very high wildlife value. Age 150-200 yrs.
19. Walnut, Black *(Juglans nigra)*	50-75'	50-70'	M	☼	I	I	H	Produces sizeable and edible fruit. Some plants may be sensitive being nearby. Age 150-175 yrs.

Native Coniferous (Evergreens)

Common Name (Latin)	At Maturity Height	At Maturity Spread	Growth Rate	Light Preference	Tolerance to: Salt	Tolerance to: Wet	Tolerance to: Drought	Comments
1. Cedar, Eastern Red *(Juniperus virginiana)*	45'	15-20'	S	☼ ◐ ●	I	I	H	Tolerates hot, dry sites; females produce blue fruits. Cones attract birds. Age 300 years.
2. Fir, Balsam *(Abies balsamea)*	50-75'	20-30'	S	☼ ◐	L	H	L	Withstands pollution. Fragrant needles. Age 100-150 years.
3. Hemlock, Emerald Fountain *(Tsuga Canadensis 'Monler')*	6-10'	2-3'	F	☼ ◐ ●	L	H	L	Shade tolerant.
4. Hemlock, Weeping *(Tsuga canadensis 'Sargentii')*	10-15'	6-8'	F	☼ ◐ ●	L	L	L	Prefers moist well drained acidic soil. Benefits from protection from winter winds.
5. Larch, American *(Larix laricina)*	40-70'	20-35'	M	☼	L	H	I	Also called Tamarack. Needles yellow in fall and drop off; small cones. Likes wet/boggy areas. Age 100-150 years.
6. Pine, Jack *(Pinus banksiana)*	20-50'	20-35'	M	☼	I	L	I	Unopened cones often gathered by squirrels in winter. Age 100-150 years.
7. Pine, Red *(Pinus resinosa)*	75-100'	35-55'	M	☼	I	L	H	Minnesota State Tree. Also called Norway Pine. Produces large cones. Age 150-200 years.
8. Spruce, Black *(Picea mariana)*	25-50'	10-12'	S	☼ ◐	H	H	L	Grows very upright. Age 150-200 years.

KEY: Growth Rate: F – Fast M- Moderate S- Slow

Light: ☼ Full Sun ◐ Part sun/part shade ● Shade

Tolerance: H – High I –Intermediate L – Low

Common Name (Latin)	At Maturity Height	At Maturity Spread	Growth Rate	Light Preference	Tolerance to: Salt	Tolerance to: Wet	Tolerance to: Drought	Comments
9. Spruce, Black Hill *(Picea glauca 'densata')*	30-50'	20-35'	S	☼ ◐	H	L	H	More dense and ornamental than other spruce.
10. Spruce, White *(Picea glauca)*	40-60'	12-20'	M	☼	H	L	H	Hardy; Needs full sun. Age 175-200 years.

Non-Native Plants

Deciduous – small

Common Name (Latin)	At Maturity Height	At Maturity Spread	Growth Rate	Light Preference	Tolerance to: Salt	Tolerance to: Wet	Tolerance to: Drought	Comments
1. Ash, European Mountain *(Sorbus aucuparia)*	20-25'	20-25'	M	☼	I	L	L	Showy white flowers; orange to red fruit. Age 25-50 years.
2. Birch, Fox Valley *(Betula nigra 'Little King')*	10'	12'	F	☼	I	H	L	In River Birch family. Very dense, compact growth. Most adaptable birch.
3. Chokecherry, Amur *(Prunus maackii)*	20-30'	18-25'	F	☼ ◐	L	L	L	Showy white flowers; attractive copper bark.
4. Crabapple *(Malus spp.)*	10-30'	8-20'	M	☼	L	I	I	White to pink flowers in spring. Choose cultivars with small, persistent fruit. Varieties are: 'PrairiFire', 'Donald Wyman', 'Sargent's' 'Purple Prince', 'Harvest Gold', 'Coralburst'.
5. Hydrangea, Tree Form *(Hydrangea paniculata 'Grandiflora')*	8-10'	6-10'	F	☼	H	I	L	White to pink flowers
6. Lilac, Dwarf Korean *(Syringa meyeri 'Palibin')*	6-8'	5-7'	F	☼	I	I	I	An excellent specimen tree for small areas.
7. Lilac, Japanese Tree *(Syringa reticulate)*	15-20'	12-15'	M	☼	I	I	I	Showy white flowers in summer.

KEY:

Growth Rate: F – Fast; M- Moderate; S- Slow

Light: ☼ Full Sun; ◐ Part sun/part shade; ● Shade

Tolerance: H – High; I –Intermediate; L – Low

Common Name (Latin)	At Maturity Height	At Maturity Spread	Growth Rate	Light Preference	Tolerance to: Salt	Tolerance to: Wet	Tolerance to: Drought	Comments
8. Lilac, Miss Kim *(Syringa patula)*	8-10'	10-15'	S	☼	I	L	I	Fragrant pink flowers. Burgundy fall color. If require smaller variety, consider 'Tinkerbelle' *(Syringa 'bailbelle') just 5-6' in height/width.*
9. Magnolia *(Magnolia acuminata)* *(Magnolia leobneri)*	8-30'	8-30'	M	☼ ◐	I	L	L	Fragrant flowers in April to May. Loebneri Magnolia runs taller - 'Merrill' variety has done well at the MN Landscape Arboretum.
10. Maple, Korean *(Acer Pseudosieboldianum)*	15-25'		M	☼	L	I	I	A hardy version of a Japanese maple. Exfoliating bark and reddish-gold fall color.
11. Maple, Tatarian *(Acer Tataricum)*	15-20'	15-20'	S to M	☼	L	L	H	Vivid orange to red fall color. Disease resistant.
12. Viburnum, Blackhaw *(Viburnum prunifolium)*	10-15'	8-12'	M	☼	L	H	I	White flower clusters, pink fruits turn black in fall. Red/bronze fall color.
13. Viburnum, Mohican *(Viburnum lantana 'Mohican')*	8'	8'	F	☼	L	H	I	Creamy white flowers. Orange/red fruit turns black in fall. Red fall color.
14. Willow, Arctic Blue Leaf *(Salix purpurea 'Nana')*	6-10'	3-6'	M	☼	I	H	I	Fine textured blue-green foliage

Deciduous - medium

Common Name (Latin)	At Maturity Height	At Maturity Spread	Growth Rate	Light Preference	Tolerance to: Salt	Tolerance to: Wet	Tolerance to: Drought	Comments
1. Pear, Ussurian *(Pyrus ussuriensis)*	25-35'	25-35'	M	☼	I	I	I	Showy spring flowers. Fruit inedible, but not present on solitary trees. Very hardy.
2. Redbud, Eastern *(Cercis Canadensis)*	20-30'	25-35'	M	☼	I	H	L	Reddish purple flower in spring. Age 50-75 years.
3. Showy Mountain Ash *(Sorbus decora)*	20-25'	20-35'	M	☼	I	I	H	White flowers. Showy red fruit clusters.
4. Willow, Laurel *(Salix pentandra)*	20-40'	15-35'	F	☼	I	H	I	Glossy, attractive dark green foliage. Age 20-40 years.
5. Yellowwood, American *(Cladrastis lutea)*	25-40'	20-35'	M	☼	I	M	L	Yellow fall leaf color. Clusters of fragrant white flowers.

KEY:

Growth Rate: F – Fast M- Moderate S- Slow

Light: ☼ Full Sun ◐ Part sun/part shade ● Shade

Tolerance: H – High I –Intermediate L – Low

Deciduous – tall

Common Name (Latin)	At Maturity Height	At Maturity Spread	Growth Rate	Light Preference	Tolerance to: Salt	Tolerance to: Wet	Tolerance to: Drought	Comments
1. Cork tree, Amur *(Phellodendrom spp.)*	30-50'	30-50'	F	☼	I	I	H	Interesting corky bark. Pollution tolerant, adaptable to wide range of soil types.
2. Elms, Hybrid *(Ulmus hybrids)*	40-60'	20-40'	F	☼ ◐ ●	I	I	H	Cultivars resistant to Dutch Elm disease: 'Accolade', 'New Horizon', Homestead', 'Discovery', and 'Cathedral'. Beneficial for butterflies.
3. Gingko *(Gingko biloba)*	40-60'	20-40'	S	☼	H	I	I	Attractive fan-shaped leaves; select male trees only. Age 100-150 years.
4. Maple, Autumn Blaze *(Acer x Freemanii)*	40-60'	40'	F	☼ ◐	L	H	H	Red fall color. Beneficial for butterflies.
5. Sassafras *(Sassafras albidum)*	30-60'	25-40'	M	☼ ◐	I	I	I	Provides wide range of fall colors. Aromatic foliage. Blue fruits attract birds.

Coniferous – small

Common Name (Latin)	At Maturity Height	At Maturity Spread	Growth Rate	Light Preference	Tolerance to: Salt	Tolerance to: Wet	Tolerance to: Drought	Comments
1. Arborvitae, Eastern *(Thuja occidentalis)*	10-15'	3-5'	M	☼	L	I	I	'Emerald' variety is narrow, compact, and pyramidal form. 'Nigra' variety is pyramidal. 'Techny' variety is also a strong grower.
2. Juniper, Chinese *(Juniperus chinensis)*	8-15'	6-12'	M	☼	I	L	H	Excellent evergreen foliage; females produce berry-like cones.
3. Larch, Deborah Waxman *(Larix laricina 'Deborah Waxman')*	6'	4'	F	☼	L	I	L	Dwarf form of American Larch. Blue-green needles turn golden yellow in fall.
4. Pine, Macopin *(Pinus strobes 'Macopin')*	8-10'	8-10'	S	☼	L	L	I	Dwarf form of white pine. Upright habit with large quantity of cones.
5. Pine, Mugho *(Pinus mugo)*	12-15'	12-15'	M	☼ ◐	L	L	H	Dense, wide-spreading form.

KEY:

Growth Rate: F – Fast; M- Moderate; S- Slow

Light: ☼ Full Sun; ◐ Part sun/part shade; ● Shade

Tolerance: H – High; I –Intermediate; L – Low

Common Name (Latin)	At Maturity		Growth Rate	Light Preference	Tolerance to:			Comments
	Height	Spread			Salt	Wet	Drought	
6. Pine, Slim Jim *(Pinus sylvestris 'Slim Jim')*	8-10'	4'	S	☼ ◐	L	L	H	Dense columnar form of Scotch Pine with twisted dark green needles.
7. Pine, Mugho *(Pinus mugo 'Tannenbaum')*	10-15'	6'	S	☼ ◐	L	L	H	Compact, pyramidal form with good winter color.
8. Spruce, Acrocona *(Picea abies 'Acrocona')*	8'	4'	S	☼ ◐	L	L	I	Compact & upright growth habit
9. Yew, Upright Japanese *(Taxus cuspidate 'Capitata')*	10-12'	3-5'	S	☼ ◐ ●	L	L	I	Prefers moist well drained soil. Shade tolerant. Needs protection from winter winds.

Coniferous – medium & tall

Common Name (Latin)	At Maturity		Growth Rate	Light Preference	Tolerance to:			Comments
	Height	Spread			Salt	Wet	Drought	
1. Fir, White *(Abies concolor)*	30-50'	15-25'	M	☼ ◐	I	I	I	Soft, evergreen foliage; excellent pyramidal form.
2. Pine, Austrian *(Pinus nigra)*	40-60'	25-40'	M	☼ ◐	H	L	I	Transplants well and is hardy. Dark green, stiff needles. Age 100+ years.
3. Pine, Scotch *(Pinus sylvestris)*	30-50'	25-40'	M	☼ ◐	L	L	H	Attractive orange bark. Age 100-150 years.
4. Pine, Swiss Stone *(Pinus cembra)*	25-35'	10-15'	S	☼	L	L	I	Dense, conical growth form; dark green foliage.
5. Spruce, Norway *(Picea abies)*	40-65'	20-35'	F	☼	L	L	I	Produces larges cones of any spruce. Age 150-200 years.

KEY:

Growth Rate: F – Fast; M- Moderate; S- Slow

Light: ☼ Full Sun; ◐ Part sun/part shade; ● Shade

Tolerance: H – High; I –Intermediate; L – Low

City of Maple Grove

Power and Phone Company Boundaries

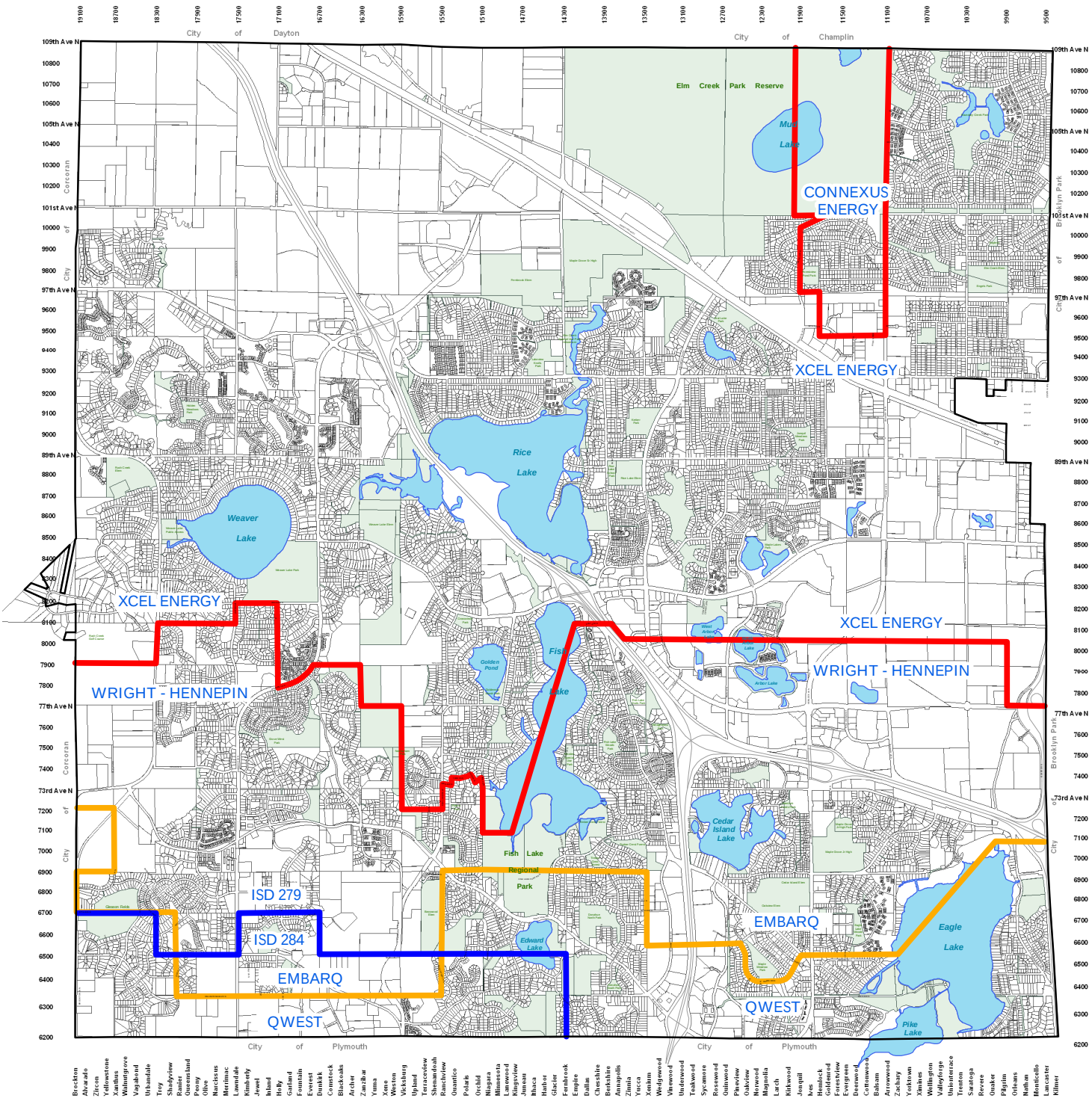

ELECTRICAL SERVICE
COMMUNICATION SERVICE
SCHOOL DISTRICTS

N

0 0.1 0.2 0.4 0.6 0.8 Miles

CITY OF MAPLE GROVE
UTILITY COMPANY CONTACTS

You are requested to contact, as soon as possible, the appropriate utility company serving your development area to initiate the process to provide the necessary utilities to serve your proposed development.

GAS

CenterPoint Energy Minnegasco	612-372-4727 612-372-5050(after hours) www.centerpointenergy.com	800 LaSalle Ave, P O Box 59038 Minneapolis MN 55402

ELECTRIC

Xcel Energy	1-800-895-4999 1-800-895-1999(after hours) www.xcelenergy.com	3115 Centre Point Dr Roseville MN 55113
Wright-Hennepin Electric	763-477-3000 763-477-3100(after hours) www.whe.org	P O Box 330 Rockford MN 55373-0330
Connexus Energy	763-323-2600 1-800-642-1672 www.connexusenergy.com	14601 Ramsey Blvd P O Box 279, Anoka MN 55303

TELEPHONE

Embarq & High Speed Internet	1-800-788-3500 www.embarq.com	343-82nd St., Chaska MN 55318
Qwest & High Speed Internet	-1-800-244-1111-Res. 1-800-603-6000-Bus www.qwest.com	

CABLE

Comcast	651-222-3333 www.comcast.com	10 Riverpark Plaza St. Paul MN 55107

GOPHER STATE ONE CALL Maple Grove Caller ID#2549
651-454-0002 or 1-800-252-1166
www.gopherstateonecall.org

NEIGHBORHOOD MEETINGS

The City of Maple Grove, in certain cases, strongly encourages developers to hold neighborhood meetings prior to bringing a development through the formal approval process. It is hoped that through these informational meetings, citizens will be better informed about the development in their neighborhoods, and be given the opportunity to voice concerns and/or provide input to the developer prior to a formal public hearing.

It is suggested that residents within a 500 ft. radius of the proposed development site be notified of the neighborhood meeting in writing. For assistance with the notification area, production of address labels, or list of possible meeting facilities and contacts located near the neighborhood, please contact the Community Development Department at 763-494-6040.

If any of the following items apply to the development being proposed, the City strongly encourages holding two or more neighborhood meetings:

- Comprehensive Land Use Plan Amendment
- Rezoning
- Proposed land use that is inconsistent with neighboring land uses.
- City financing or other City involvement

HOW TO ORGANIZE COMMUNITY MEETINGS

Holding an open invitation community meeting is only one way of communicating with prospective neighbors. Other options include direct mail, door to door canvassing (with handouts), holding one smaller pre-meeting prior to a large meeting, holding a series of smaller house meetings, or hold an all day “open house” in the neighborhood in which developer staff are available to provide information and answer questions. The main benefit of open invitation community meetings is that they can require less staff time. The benefit of smaller meetings and open houses is the opportunity for better conversation, more civility, better understanding of your organization and the proposal.

CITY OF MAPLE GROVE 2016 PLANNING COMMISSION SUBMISSION DATES

Submission Deadline (DATE is FIRM)	Planning Commission Meeting Dates	City Council Meeting Dates	Osseo-MG Press PH Notice Deadline	Residential Mailing Deadline
December 14, 2015 December 28, 2015	January 11, 2016 January 25, 2016	*Tues., January 19, 2016 February 1, 2016	December 24, 2015 January 7, 2016	December 31, 2015 January 15, 2016
January 11, 2016 February 1, 2016	February 8, 2016 February 29, 2016	*****Tues., February 16, 2016 March 7, 2016	January 21, 2016 February 11, 2016	January 29, 2016 February 19, 2016
*Tues., February 16, 2016 February 29, 2016	March 14, 2016 March 28, 2016	March 21, 2016 April 4, 2016	February 25, 2016 March 10, 2016	March 4, 2016 March 18, 2016
March 14, 2016 March 28, 2016	April 11, 2016 April 25, 2016	April 18, 2016 May 2, 2016	March 24, 2016 April 7, 2016	April 1, 2016 April 15, 2016
April 11, 2016 May 2, 2016	May 9, 2016 *****Tues., May 31, 2016	May 16, 2016 June 6, 2016	April 21, 2016 May 12, 2016	April 29, 2016 May 20, 2016
May 16, 2016 *Tues., May 31, 2016	June 13, 2016 June 27, 2016	June 20, 2016 *Tues., July 5, 2016	May 26, 2016 June 9, 2016	June 3, 2016 June 17, 2016
June 13, 2016 June 27, 2016	July 11, 2016 July 25, 2016	July 18, 2016 August 1, 2016	June 23, 2016 July 7, 2016	July 1, 2016 July 15, 2016
July 11, 2016 August 1, 2016	August 8, 2016 August 29, 2016	August 15, 2016 *****Tues., Sept. 6, 2016	July 21, 2016 August 11, 2016	July 29, 2016 August 19, 2016
August 15, 2016 August 29, 2016	September 12, 2016 September 26, 2016	September 19, 2016 October 3, 2016	August 25, 2016 September 8, 2016	September 2, 2016 September 16, 2016
September 12, 2016 October 3, 2016	October 10, 2016 October 31, 2016	October 17, 2016 November 7, 2016	September 22, 2016 October 13, 2016	September 30, 2016 October 21, 2016
October 17, 2016 October 31, 2016	November 14, 2016 November 28, 2016	November 21, 2016 December 5, 2016	October 27, 2016 November 10, 2016	November 4, 2016 November 18, 2016
November 14, 2016	December 12, 2016	December 19, 2016	November 23, 2016	December 2, 2016

Planning Commission meetings are held on the 2nd and last Mondays of the month at **7:00 p.m.** unless a holiday falls on a Monday, then it would be held on the following Tuesday. After the Planning Commission makes its recommendation, (unless it is tabled) the item will be scheduled on the next available City Council meeting for their action.