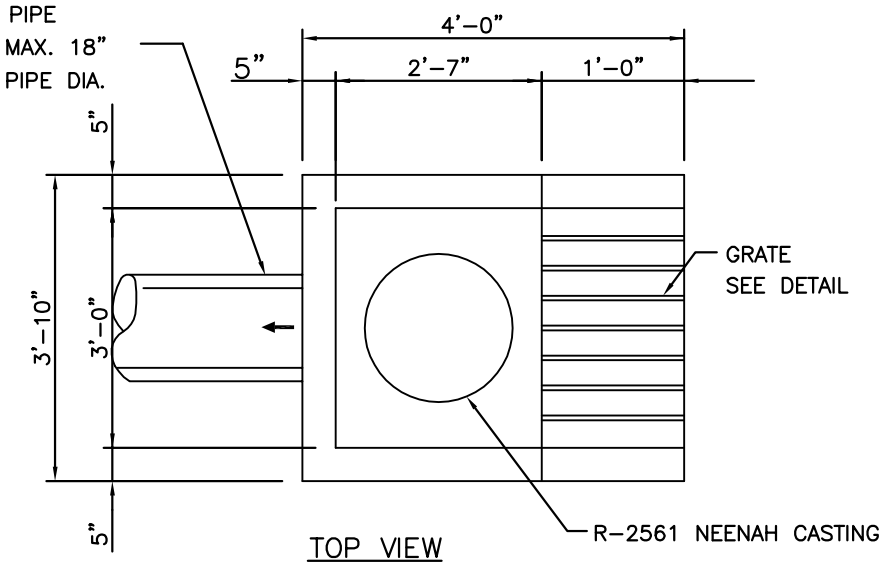

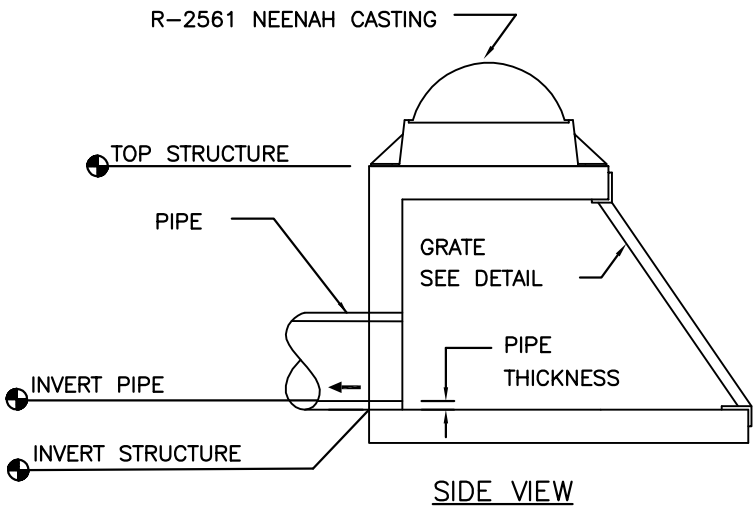

NOTES:

STRUCTURE SHALL BE REINFORCED PRECAST CONCRETE

GRATING SHALL BE HOT DIPPED GALVANIZED AFTER FABRICATION

ALL ANCHOR BOLTS SHALL BE $\frac{1}{2}$ ø STAINLESS STEEL EXP. ANCHORS W/4" MINIMUM EMBEDMENT

MAXIMUM SIZE PIPE TO BE 18"

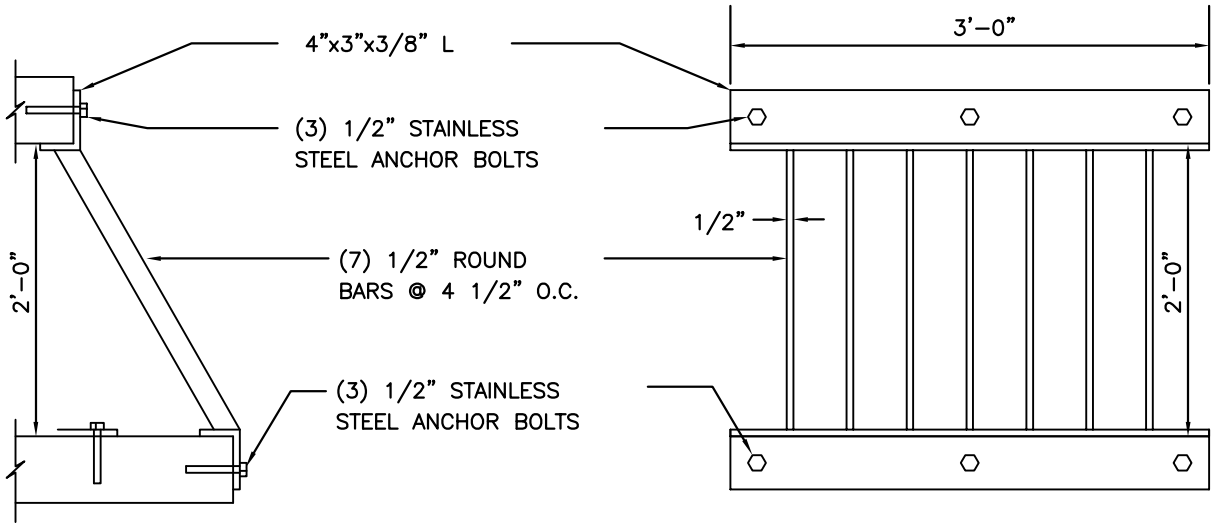

GRATE DETAIL

City of Maple Grove	INLET STRUCTURE W/ OVERFLOW	STANDARD PLATE # STS-11
LAST REVISION NOVEMBER 2014	CITY OF MAPLE GROVE ENGINEERING & PUBLIC WORKS DEPARTMENTS	