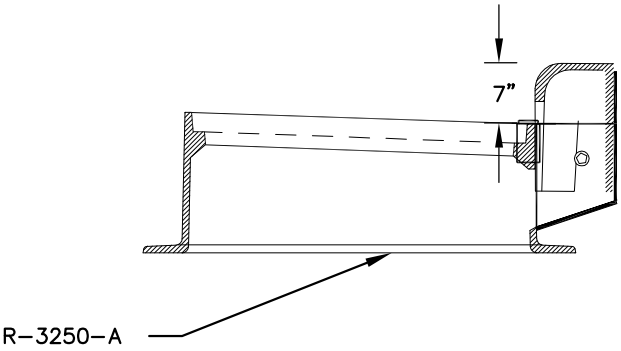

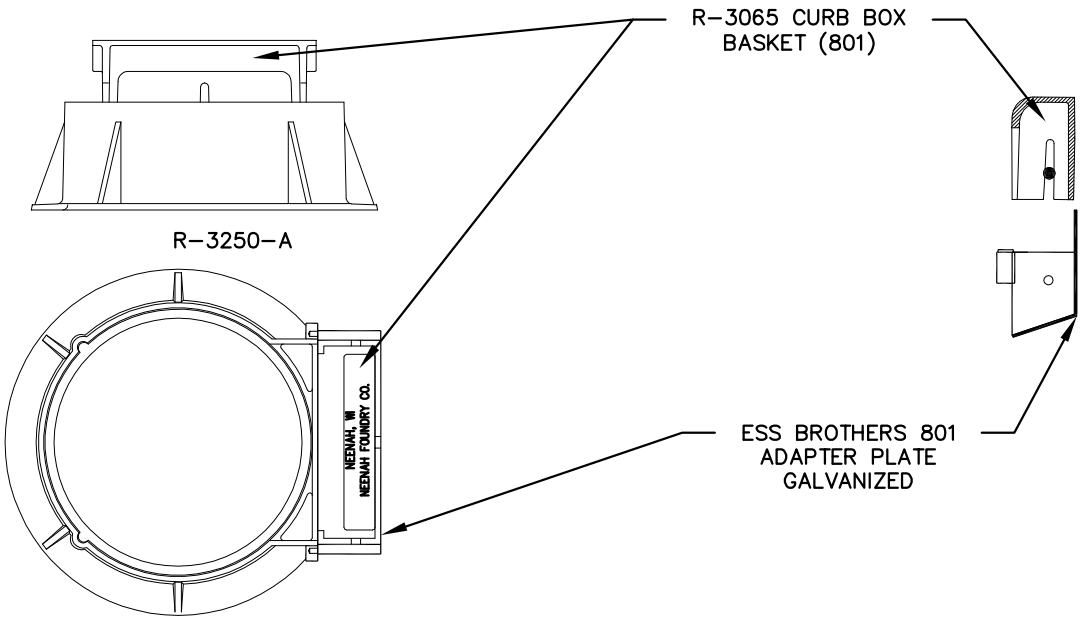

NOTES:

R–3065 CURB BOX BASKET (801)

ESS BROTHERS 801 ADAPTER PLATE GALVANIZED TO EXISTING R–3250–A

City of Maple Grove	CATCH BASIN CASTING R-3250-A CURB BOX ADAPTER	STANDARD PLATE # STS-6
LAST REVISION NOVEMBER 2014	CITY OF MAPLE GROVE ENGINEERING & PUBLIC WORKS DEPARTMENTS	