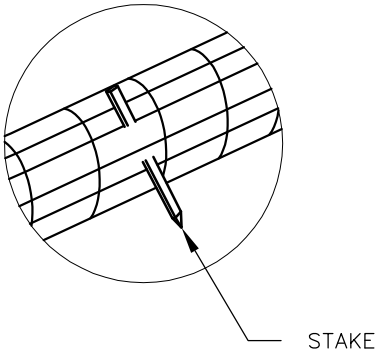


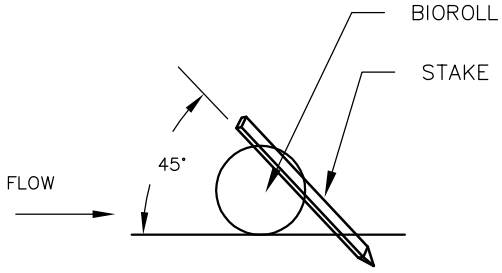


2"X2"X16" LONG WOODEN STAKES AT 1'-0" SPACING MINIMUM. STAKES SHALL BE DRIVEN THROUGH THE BACK HALF OF THE COMPOST LOG AT AN ANGLE OF 45° WITH THE TOP OF THE STAKE POINTING UPSTREAM

NOTE:
POINT 1 MUST BE A MINIMUM OF 6" HIGHER THAN POINT 2 TO ENSURE THAT WATER FLOWS OVER THE DIKE AND NOT AROUND THE ENDS

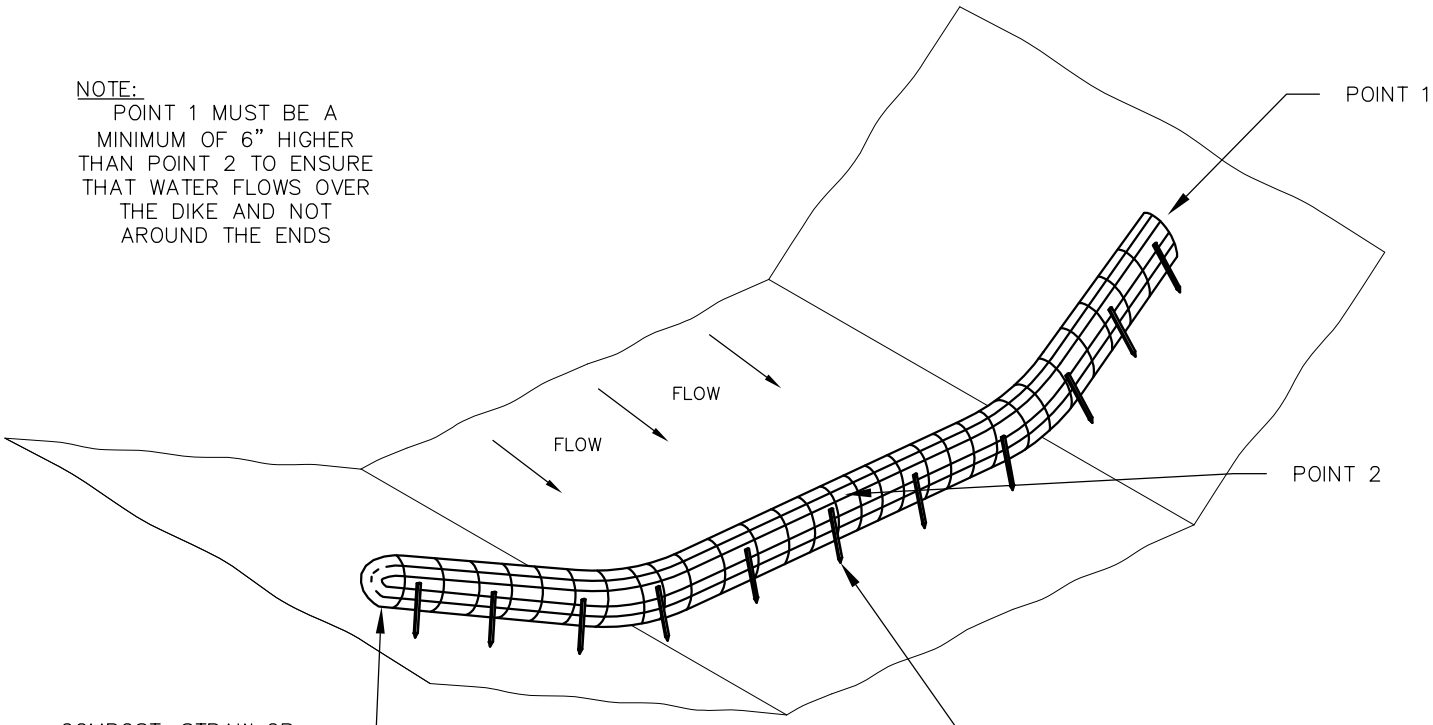


COMPOST, STRAW OR WOOD FIBER 12" DIA. ROLL ENCLOSED IN POLYPROPYLENE NETTING OR A GEOTEXTILE BAG

City of Maple Grove

LAST REVISION
NOVEMBER 2014

# BIOLOG DITCH CHECK

CITY OF MAPLE GROVE ENGINEERING
& PUBLIC WORKS DEPARTMENTS

STANDARD PLATE #
EROS-11