CITY OF MAPLE GROVE
12800 ARBOR LAKES PARKWAY
P. O. BOX 1180
MAPLE GROVE MN 55311-6180
763-494-6040

Office Use Only:

CASE #_____

PLANNER:

_____

SITE PLAN REVIEW APPLICATION (in-house)

Name of Project: _____

Application is hereby made for a Site Plan Review for the construction of a(n)_____

_____ **s.f. building in a(n)** _____**zoning district.**

Address of Property: _____

PID#'s: _____

OWNER: _____

CONTACT NAME (PRINT): _____ **PHONE:** _____

ADDRESS: _____ **FAX:** _____

CITY/ZIP: _____ **E-MAIL:** _____

APPLICANT: _____

CONTACT NAME (PRINT): _____ **PHONE:** _____

ADDRESS: _____ **FAX:** _____

CITY/ZIP: _____ **E-MAIL:** _____

The following information is submitted in support of the application as described on the attached "Site Plan Review Requirements".

- _____**1) Completed Application for Site Plan Review (Submission Deadline Dates FIRM)**
- _____**2) Application Fee of $350**
- _____**3) Completed Acknowledgement of Responsibility form**
- _____**4) Completed Affirmation of Sufficient Interest form**
- _____**5) Narrative describing project**
- _____**6) Completed Application to appropriate Watershed District**
- _____**7) 15 folded copies AND 1 (8½" × 11") paper copy of the following (check w/staff to see if less than 15):**
  - _____**a) Site Plan**
  - _____**b) Map of Existing Conditions**
  - _____**c) Landscape Plan**
  - _____**d) Grading/Drainage Plan**
  - _____**e) Building Elevations of all sides**
- _____**8) One Colored Rendering of Building Elevations**
- _____**9) Also after staff review of the initial project, we will need the following updated maps of all items in #7 (a-e): 3 folded copies AND 1 set of (8½" × 11") paper copies**
- ____**10) Information required on attached Hennepin County Preliminary Plat/Development Review Process pamphlet dated January 2010.**

***The 2015 rate for City sewer and water connection charges for commercial, industrial and institutional properties are $11,580 per acre ($2,640 sewer / $8,940 water). SAC - $2,485/unit. These fees must be paid at the time building permit is issued. Please contact Becky Roy at 763-494-6062 if you have questions.**

_____	_____	_____
Applicant's Signature	**Printed Name**	**Date**

ACKNOWLEDGEMENT OF RESPONSIBILITY

This is to certify that I am making application for the described action by the City and that I am responsible for complying with all City requirements with regard to this request. This application should be processed in my name and I am the party whom the City should contact regarding any matter pertaining to this application.

I have read and understand the instructions supplied for processing this application. The documents and/or information I have submitted are true and correct to the best of my knowledge. I will keep myself informed of the deadlines for submission of material and of the progress of this application.

I understand that this application may be reviewed by City staff and consultants. I further understand that additional information, including, but not limited to, traffic analysis and expert testimony may be required for review of this application. I agree to pay to the City upon demand, expenses, determined by the City, that the City incurs in reviewing this application and shall provide an escrow deposit to the City in an amount to be determined by the City. Said expenses shall include, but are not limited to, staff time, engineering, legal expenses and other consultant expenses.

I agree to allow access by City personnel to the property for purposed of review of my application and to erect a temporary sign indicating the application proposed.

Signature of applicant _____ Date_____

Name of applicant _____ Phone_____
(Please Print)

Name and address of Contact (if other than applicant) _____

_____

_____

_____

_____

_____ _____
Phone Number **Date**

AFFIRMATION OF SUFFICIENT INTEREST

I hereby affirm that **I am the fee title owner** of the below described property or that I have written authorization from the owner to pursue the described action.

Name of applicant _____
(Please Print)

Street address/legal description of subject property _____

_____

_____

_____

_____

_____ _____
Signature **Date**

If you are not the fee owner, attach another copy of this form which has been completed by the fee owner or a copy of your authorization to pursue this action.

If a corporation is fee title holder, attach a copy of the resolution of the Board of Directors authorizing this action.

If a joint venture or partnership is the fee owner, attach a copy of agreement authorizing this action on behalf of the joint venture or partnership.

SITE PLAN REVIEW REQUIREMENTS

The following information is required for requesting site plan review approval. Please refer to Zoning Ordinance Section 36-81 through 36-85 for specific information.

1. **Map** indicating existing conditions on the site and all property and all property within 200 feet. This scaled drawing should show:
   a) Property boundaries and dimensions.
   b) Adjacent roadways and access points.
   c) Existing topographical contours.
   d) Existing structures
   e) Existing parking areas and other man-made features.
   f) Existing significant vegetation

2. **Site Plan -** this shall be a scaled drawing indicating:
   a) Building footprints, size and dimensions.
   b) Parking areas including location of handicapped.
   c) Setback lines.
   d) Wetlands or floodplains
   e) Ingress and egress points
   f) Sign locations and details. (optional)
   g) Light fixture details and placement.
   h) On this plan, a summary should be provided indicating building square footage, lot areas, parking spaces (also indicating number of handicapped spaces), lot coverage, type and height of light fixtures, and green space.
   i) Details of curbed gutter, concrete entrance aprons, parking lot/driveway sections, other site improvement details.

3. **Landscape Plan -** This shall be a scaled drawing indicating:
   a) Any existing trees to remain by size and species.
   b) Proposed plantings by size, species, and planting mode (B/R, B/B).
   c) Any berms or other buffers provided.
   d) Location and type of underground sprinkling system.
   e) Retaining walls or other improvements considered part of the landscape plan.

4. **Grading and Drainage Plans** (can be combined with landscape plan) indicating:
   a) Existing contours and final land contours
   b) Method of drainage proposed (catch basins, culverts, ponding areas)

5. **Utility Plan** (can be combined with Drainage Plan)
   a) Sanitary sewer
   b) Water
   c) Hydrant location
   d) Miscellaneous external mechanical

6. **Building Elevations** indicating:

a) Building heights
b) Building material of roof and facade
c) The relationship of the building to the site and surrounding area
d) Colored renderings of elevations and perspective drawings

7. **Written narrative** explaining the type of use, operational information, design parameters, development concept, and time schedule of the facility being proposed.

8. One Set of **8½ X 11 Paper Copies** of 1 - 6 above.

Sec. 36-65. Growth management plan; project point system.

(a) Project point system. All applications, subject to this division with a residential component guided low-medium density residential, over ten acres in size and outside the gravel mining area, or guided medium density residential or high density residential, regardless of size, and outside of the gravel mining area, for development stage plan shall be assessed and reviewed simultaneously against the project points system, which is on file at city offices and is hereby made a part of this section. In such case, the applicant shall comply with all provisions of this chapter applicable to the application. The subject application shall be reviewed and assessment of points shall be completed by city staff and a written report shall be submitted to the planning commission and the city council for their consideration. The planning commission and the city council shall consider said application and shall grant or deny development stage plan approval in accordance with the provisions of subsection 36-64(b) and this section.

(b) Submission requirements. In addition to the submission requirements of section 36-63, applicants must submit any information to satisfy the categories in the project point system and such other information as the planning commission, city staff or city council shall find necessary to allow a full consideration of the enter proposed PUD.

(c) Utilization of specific categories. Only categories in the project point system that have the opportunity to be utilized and actually exist from the proposed PUD shall be considered in the assessment of the PUD under the project point system. Applicant must provide evidence sufficient to the city that a specific category should not be considered. Categories that are determined by the city not to have the opportunity to be utilized nor actually exist shall not be considered in the determination of points.

(d) Minimum points required. A PUD subject to this section must achieve at a minimum 75 percent of the total points possible under the project point system. Any PUD not achieving the above minimum percentage of points shall not be granted approval.

(Ord. No. 04-16, § 1, 7-19-2004; Ord. No. 05-08, § 1, 3-7-2005; Ord. No. 15-01, § 2, 1-5-2015)

DIVISION 3. SITE PLANS

Sec. 36-81. Purpose.

This division is established to provide comprehensive procedures and standards designed to ensure city review procedure for developments (other than single-family detached dwellings, two-family dwellings, planned unit developments, and public trails, playlots, neighborhood parks, and playfields) seeking to locate or expand within the city. This procedure will provide the city with the opportunity to ensure a development's conformance with the city development regulations and to provide the city with a reasonable degree of discretion in determining the suitability of development proposal impacts upon the general welfare, public health, and safety. In making this determination, whether or not the site plan is to be approved, the city will consider all applicable ordinance development standards, the nature of the land and/or buildings, whether or not any use is already in existence and located on the same premises, or on any adjoining roads, and all other or further factors as the city shall deem prerequisites of consideration in determining the effect of the development on the general welfare, public health and safety. The site plan review procedure is also intended to ensure the development of capable and quality site systems in the areas of:

(1) Utilities.

(2) Transportation.

(3) Site drainage.

(4) Open spaces.

(5) Site environment and landscaping.

(6) Structure/lot area relationships.

(Code 1984, § 375:117(1))

Sec. 36-82. General requirements.

(a) Application for approval. An application for site plan approval must be filed with the city for all developments (except for single-family detached and two-family dwellings, development within a PUD, and public trails, playlots,

neighborhood parks, and playfields) within the city. Such application shall be filed with the director of community development on an official application form and shall be accompanied by a nonrefundable fee and any surety, escrow, or deposit as provided for by the city council as set forth in chapter 16, article XI. Formal review and approval of the plans must be given by the city staff before any related site development can be pursued.

(b) Ownership of property. An application for a site plan approval must be filed by the landowner or jointly by all landowners of the property included in a project. The application and all submissions must be directed to the development of the property as a whole. In the case of multiple ownership, the approved final plan shall be binding on all owners.

(c) Consistency with comprehensive plan and zoning regulations. The proposed site plan shall be consistent with the city's comprehensive plan and this chapter.

(d) Plan submission. Ten sets of all site plans and 8½-inch by 11-inch transparencies thereof shall be submitted to the community development department with all required information. The plan shall be considered as officially submitted only when all of the information and fee requirements are met.

(e) Contents. All site plan submissions shall be drawn to a scale of one inch equals 50 feet or less (engineering scale only) and be produced in a fashion which ensures legibility and clarity. In addition to the full-scale plan, an additional reduction of the plan on an 8½-inch by 11-inch sheet shall be required as part of the submission. The site plan shall contain at least the following information, and all additional information as required by city staff:

(1) General information.

a. The landowner's name, address and phone number.

b. The applicant's name, address and phone number, if different from the landowner, and his interest in the subject property.

c. The names, addresses, and phone numbers of all professional consultants who have contributed to the development of the plan being submitted, including the architect, land planner, engineer, surveyor, and attorney.

d. Evidence that the applicant has sufficient control over the subject property to effectuate the proposed site plan.

e. Date of plan preparation.

f. Dates and descriptions of all revisions.

g. North point indication.

h. The statement that construction shall be in accordance with the city's Standard Specifications for Utility and Street Construction, 1979, as amended.

(2) Present surrounding area status.

a. The address and legal description of the subject property.

b. The existing zoning classification and present use of the subject property and all lands within 200 feet of the subject property.

c. A map depicting the existing development of the property and all land within 200 feet.

d. A plan showing the precise location of existing streets, property lines, easements, water mains, and storm and sanitary sewers with invert elevations on and within 100 feet of the subject property.

(3) Present on-site status. All of the graphics should be the same scale to allow easy cross-reference.

a. Contours at minimum two-foot intervals on and within 20 feet of the subject property.

b. Location, type, and extent of tree cover.

c. Sufficient spot elevations and/or contours to indicate changes in slope on and within 20 feet of the subject property. Elevations of the centerline and gutter line of existing streets at each proposed access must be shown.

d. Location and extent of water bodies, wetlands and streams, and floodplains within 300 feet of the subject property.

e. Significant rock outcroppings.

f. Existing drainage patterns.

g. Vistas and significant views.

h. Soil conditions as they affect development.

(4) Utility plan. Plans indicating the location of water and sanitary sewer lateral and service locations. Also indicated shall be the size and type of pipe and all other information, such as hydrants and cleanouts, as may be required by the city engineer.

(5) Property dimension plan. Plans showing property lines, dimensions, lot area, required yard setbacks, easements and rights-of-way of the property and any significant topographical or physical features of the property based upon a certified survey.

(6) Structure information plan. Plans showing the location, size, use and arrangement, including height in stories and feet and total square feet of ground area coverage and floor area, of proposed buildings. Also provided shall be architectural plans showing building elevations and exterior wall finishes of proposed buildings.

(7) Internal circulation plan. Plans showing the location, dimensions and number of driveways, entrances, fire lanes, concrete entrance aprons, curb cuts, concrete curbing and gutter, parking stalls, parking lot islands, loading spaces, access aisles, concrete sidewalks, and all other circulation elements of the site.

a. All site elements as listed in this subsection shall have noted on the plan a related cross section of element composition and construction design.

b. All material compositions, i.e., bituminous, gravel, concrete, sod, etc., shall be noted on the plan.

c. Spot elevations, including high points, corners of parking lots, and existing street elevations, shall also be shown on the plan.

(8) Landscaping, screening and berming plan. Plans showing detailed locations, sketches, and provisions of existing and required landscaping, berming, and screening elements of the site.

a. All those related elements which will be removed shall be properly noted on the plan.

b. All plant screening and landscaping elements shall be broken out into types, sizes, and total numbers proposed in the plan.

c. All fences shall be shown and related elevations and cross sections provided.

(9) Grading and drainage plans. Plans showing all existing and proposed site contours in no more than two-foot contours.

a. Also provided shall be detailed site drainage plans, including the detailing of the site's storm sewer system with catchbasins and invert elevations.

b. Casting types must be shown for all catchbasins.

(10) Erosion control plan. Plans for site erosion control as required by the city engineer.

(11) Lighting plan. Plans showing location, height, and candlepower of all luminaries on the site. All parking lot lighting standards located within the parking lot area must be located within parking lot islands.

(12) Staging plan. If the project is to be constructed in several stages, all stages shall be clearly detailed out on the plan. This shall also include future expansion elements of a proposal.

(13) Sign plan. Plans showing all proposed signage for the site in accordance with chapter 24.

(14) Planned improvements summary. Calculation of the area, length, amount or other summary dimensions or inventory for each improvement contemplated pursuant to this subsection (e), which calculation shall be useful to the city planning department in determining the amount of the surety to be provided pursuant to section 36-84.

(Code 1984, § 375:117(2))

Sec. 36-83. Procedure for review and approval.

(a) Generally. Except as otherwise provided in this section, all plans for site development within the city as described in this chapter shall be subject to formal review and approval proceedings.

(1) Upon submission of the site plan as specified in section 36-82 the city staff shall circulate the plan to all appropriate city, county, state, and federal agencies for their review and comment.

(2) Upon receipt of all agency reviews, a meeting between the applicant and all involved reviewers to discuss any necessary plan amendments will be held. After the meeting, the applicant shall make any necessary revisions and submit a final site plan.

(b) Final site plan.

(1) Purpose. The final site plan is to serve as a complete, thorough, and permanent public record of the manner in which the subject site is to be developed. It shall incorporate all revisions and conditions resulting from the site plan review process.

(2) Submission. Three copies of the final site plan shall be submitted to the director of community development for review and approval. Subsequent to receiving approval of the final plan, the applicant may apply for a building permit.

(3) Preconstruction meeting. After a building permit has been applied for, and before issuance thereof, a preconstruction meeting shall be required to take place. It shall be the developer's responsibility to arrange the preconstruction meeting with the city staff. At this meeting, the building construction plans will be reviewed and compared with the approved final plan. If the building construction plans are not in substantial conformance with the final plan, the building construction plans shall be revised to achieve such conformance.

(4) Limitation on final site plan approval. Within one year after the approval of a final site plan, or such shorter time as may be established by the approved development schedule, construction shall commence with the approved plan.

a. If, after one year from being granted site plan approval, the plan as permitted by the approval shall not have been initiated, then such approval shall be null and void.

b. A request for extension may be made within 30 days before such deadline and shall state facts showing a good faith attempt to complete or utilize the use permitted in the site plan approval.

c. The zoning administrator shall place the subdivider's request on the agenda of a regularly scheduled council meeting to be held within 30 days of such filing.

d. The council at its discretion may grant the extension, for not more than one year, for, when good cause shown, such extension is necessary.

e. Only one such extension may be made.

(Code 1984, § 375:117(3); Ord. No. 04-09, § 4, 4-19-2004)

Sec. 36-84. Site improvement performance agreement and surety.

(a) Upon approval of a final site plan and prior to the issuance of building permits or initiation of work on the proposed improvement or development, the developer shall execute a performance agreement setting out site improvement items and terms of completion of such items. The performance agreement and any surety required therein must be approved by the city attorney.

(b) Any surety required by the performance agreement shall be noncancellable and shall guarantee conformance and compliance with the conditions of the site plan approval, the performance agreement and the ordinances of the city.

(c) The city shall hold the surety for such period of time as set forth in the performance agreement.

(1) The surety may only be released by the city council.

(2) Periodically, the amount of the surety may be reduced by the city council.

(3) Reduction and release actions will only be initiated after proper request has been made by the developer.

(d) Failure to comply with the conditions of the site plan approval, the performance agreement or the ordinances of the city shall result in forfeiture of the surety to the extent necessary to achieve the project's total compliance with the approved site plan.

(Code 1984, § 375:117(4))

Sec. 36-85. Issuance of building permits and other permits.

Except as otherwise expressly provided in this division, upon receiving notice from the director of community development that the final site plan has been approved and a properly executed performance agreement has been received, and upon application of the applicant pursuant to the applicable ordinances of the city, all appropriate officials of the city may issue building and other permits to the applicant for development, construction, and other work in the area encompassed by the final site plan; provided, however, that no such permit shall be issued unless the appropriate official is

first satisfied that the requirements of all codes and ordinances which are applicable to the permit sought have been satisfied.

(Code 1984, § 375:117(5))

Key Steps in the County Plat Review Process

- Preliminary Plat is submitted to the county by the city
- County acknowledges receipt and notes any missing items via mail-back card
- Once the submittal is deemed complete – the 30-day review period begins.
- The county Plat Review Committee meets to discuss the plat. Follow-up meetings may occur if further information or analysis is needed.
- The county submits a comment letter to the city noting any issues, concerns or requirements.
- The city responds back to the county via letter regarding how the county comments will be addressed. If any unresolved issues remain – the city schedules a meeting with county staff to discuss.
- The city council approves the preliminary and final plats.
- The property owner / developer submits the plat to the county surveyor's office for registration. ***Submittal items must include:***
    - ***Evidence of the submission of the preliminary plat to the county.***
    - ***Copy of the county comment letter on the preliminary plat.***
    - ***Copy of the city response to the county comment letter and evidence of any follow-up meetings held with the county to resolve remaining issues.***

Information on the Hennepin County Preliminary Plat / Development Review Process

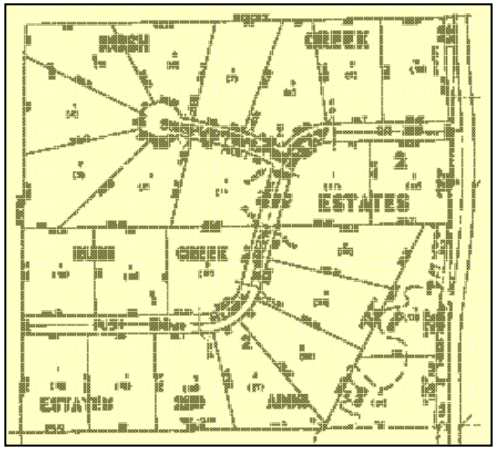

January 2010

Hennepin County

Transportation Planning

Purpose of this Brochure

This brochure was developed to clarify how the county plat review process works, who is responsible for submittals to the county, and what type of response schedule can be anticipated.

Minnesota State Statutes MS 505.02, 505.03 and 462.358 stipulate that cities need to submit plats to the county for review and comments. These statutes also specify what items of information must be submitted and what time schedules apply.

Who Should Submit Plats ?

For formal plat reviews, the county does not accept plat submissions from third parties – the submissions must come from the city directly. City submission is important to ensure completeness of the submission, provide consistency in the process, and to assure good communication.

Prior to a formal submittal, county staff is very willing to examine concept layouts, preliminary site plans, or sketch plans. Cities, developers, project consultants, or property owners can submit this type of draft information. The benefit of an early review is that many issues can be identified and possibly resolved prior to the formal plat review process (often speeding up all subsequent reviews).

Where to Submit Plats

Preliminary Plats should be submitted to:

Hennepin County
Transportation Planning Division
1600 Prairie Drive
Medina, MN 55340-5421

Questions or comments can be directed to:

Bob Byers, P.E., Senior Professional Engineer
(612) 596-0354

Plat Submittal Checklist

Plat submittals to the county should include a transmittal letter and a set of legible plans that include the following information:

- ❑ The transmittal letter should include the city contact person, the dates of upcoming city actions such as Planning Commission or City Council meetings, and when a response is needed from the county.
- ❑ A location map of the site relative to area roadways and local streets.
- ❑ A site plan map with scaled dimensions authenticated by a registered engineer or land surveyor showing:
  - Date, title, scale, and north arrow
  - All existing and proposed property lines
  - Lot dimensions, right-of-ways, & easements
  - Existing centerline and paved area of the county roadway (which is not always centered in the right-of-way)
  - Proposed development building footprints
  - Parking lot layouts, aisle configuration
  - Locations of ingress and egress to the proposed platted area including existing and proposed driveway locations.
  - Locations of other nearby driveways, street intersections and access points on the county roadway in the vicinity of the proposed plat. This would include driveways immediately adjacent to or across from the proposed plat.
  - The outlet for and means of disposal of surface waters from the proposed platted area
- ❑ A written description of the current and proposed use of the property including land use type (commercial, industrial, residential, etc.) and specific uses (discount store, convenience center, etc.) if known.
- ❑ If the plat is for non-residential uses, include an estimate of the amount of daily traffic the development is expected to generate.

How are Plats Evaluated ?

County staff evaluates proposed plats for a number of items that affect county roadways. Some examples of review items include;

Safety Issues
- Conformance with entering sight distance guidelines
- Unusual weaving & merging maneuver conflicts
- Turn lane / auxiliary lane needs

Access Management
- Proposed driveway and street entrance compliance with county access spacing guidelines
- Opportunities for access reorientation and / or consolidation
- Driveway design, throat lengths

Right-of-Way Needs
- Anticipated future roadway section
- Right-of-way needs for turn lanes / auxiliary lanes
- Other needs (pedestrian / bike accommodations)

Operational Elements
- Intersection capacity analysis
- Turn lane / auxiliary lane design configurations
- Traffic control needs
- Potential on-site circulation impacts ?

Pedestrian and Bicycle Accommodations
- Is roadway designated as part of a city bike plan or the County Bicycle System Plan ?

Miscellaneous Items
- Drainage needs (road and / or site ?). Any encroachments within roadway right-of-way ?
- Proposed grading impacts

Review Schedule

State Statutes provide the county up to ***30 calendar days*** for review after receipt of the plat. This review period only starts when the county receives a ***complete*** plat submittal.

As part of the plat review process, the county will confirm the receipt of the plat with the city and provide notification of any missing information.

The back page of this brochure illustrates the key time points for the county review process.

SPECIFICATIONS FOR
COMMERCIAL, INDUSTRIAL, AND INSTITUTIONAL
SITE IMPRPOVEMENTS

1. MECHANICAL EQUIPMENT

   All rooftop mechanicals shall be screened with materials that are architecturally compatible with the building. All ground level mechanicals (air conditioning units, Xcel boxes, etc.) shall be screened with shrubs or an approved fence.

2. TRASH CONTAINERS

   All exterior trash containers shall be screened by an enclosure of masonry or brick construction. Screening enclosure gates may be constructed of wood.

3. LANDSCAPING

   Landscape plans shall be prepared by a landscape architect or other qualified individual acceptable to the City's Department of Community Development.

4. LIGHTING

   Off-street parking shall be illuminated to an average level of one (1) foot candle (not to exceed 8 feet) at ground level over the entire surface of the parking area. All light fixtures, whether wall-mounted or attached to poles, shall be hooded and shall shine directly downward to prevent glare onto adjoining properties.

5. SIGNAGE

   All signage shall be in conformity with the Maple Grove Sign Ordinance. See Barb Bogen about ordinance regulations.

6. PEROFRMANCE AGREEMENT

   Upon City Council approval of a Site Plan and prior to the issuance of building permits or initiation of work on the proposed improvement or development, the developer shall execute a Performance Agreement setting out site improvement items and terms of completion of said items.

7. SURETY

   A. The posting of surety shall be required at the time a certificate of occupancy is to be issued. The owner shall provide the City with cash, corporate surety bond, approved Letter of Credit or other surety satisfactory to the City in the amount equal to 110% of the estimated cost for completion of uncompleted

site improvements, if the surety submitted is in the form of cash or Letter of Credit, or 150% of such estimated cost, if the surety submitted is in the form of a bond (contact Karen Kramer for sample forms). Landscaping surety is held at 100%.

B. The City shall hold the surety for such period of time as set forth in the Performance Agreement.

   1. The surety may only be released by the City Council.

   2. Periodically, the amount of surety may be reduced by the City Council.

   3. Reductions and release actions will only be initiated after proper request has been made by the developer.

   4. Failure to comply with the conditions of the site plan approval, the Performance Agreement or the Ordinances of the City shall result in forfeiture of the surety to the extent necessary to achieve the project's total compliance with the approved site plan.

C. Surety posted to guarantee the proper installation and vigorous growth of all landscape elements and screening required herein shall remain in effect for two (2) full growing seasons.

   1. A growing season shall include the period May 1 through October 31.

   2. The two-year guarantee period for plant material installed after June 1 shall commence the following year.

   3. Lots provided with an irrigation system covering one hundred percent (100%) of the area improved with landscaping need only provide a surety for one (1) growing season.

8. <u>REQIURED INSPECTIONS</u>

   A. After site is graded but prior to laying bituminous.

   B. After first lift of bituminous is laid.

   C. While pouring concrete curbs and gutters.

   D. Call for final site inspection two weeks before you wish to occupy the building. A final calculation of uncompleted site improvements must be made and wording on the surety (bond or letter of credit) must be reviewed by the City Attorney.

ENGINEERING REQUIREMENTS
FOR
INDUSTRIAL/COMMERCIAL DEVELOPMENT

1. STREETS AND PARKING LOTS

A. All parking lots and driveways shall be constructed to a 7-ton pavement design, unless the pavement is subjected to truck traffic, and then shall be constructed to a 9-ton design. The minimum bituminous surfacing thickness shall be 3 inches for a 7-ton design and 4 ½ inches for a 9-ton design. The pavement shall be placed in 2 lifts minimum. The first lift shall be 2331 base course. The final lift shall be 2341 wear course.

B. Aggregate base shall be Class 5 or an approved equal. The thickness required for a 7-ton design shall be 6 inches, and 8 inches for a 9-ton design. This is based on A-6 soils with a R-value of 15. The aggregate base may be modified with the City Engineer's approval, if an acceptable soils report is provided by the developer certifying a higher R-value.

C. Poured in place concrete curb and gutter shall bound all parking lot and driveway areas (pin curb not allowed). Bituminous curb will only be allowed where a parking lot or driveway is temporary or will be expanded in the near future. A minimum of 2 inches of gravel or sand shall be installed below curb and gutter.

D. All driveways shall be constructed with a concrete apron pursuant to Plate No. 5207.

E. Safety islands shall be constructed at the end of all parking lot tiers and be bound by concrete curb and gutter. The minimum island width shall be 4 feet, measured from face-to-face of curb.

F. The parking lot and driveways should be detailed in regard to drainage patterns, and should show specific spot elevations along the gutter lines and other areas where appropriate.

G. Sidewalk abutting the parking lot or driveway shall be separated by concrete curb and gutter with an expansion joint.

2. STORM SEWER

A. All parking lot and driveway areas must have internal storm drainage collected by a catch basin-pipe system, unless unable to do so, as determined by the City Engineer.

B. There are three types of storm sewer pipe allowed in the City of Maple Grove and they are reinforced concrete, smooth bore H.D.P.E. PVC and dual-wall polyethylene

pipe with a smooth interior surface. The minimum concrete pipe size allowed is 15 inches in diameter. The minimum PVC pipe size for parking lot drainage shall be 12 inches in diameter. If PVC pipe is used, a rubber O-ring gasket or approved boot shall be located where the pipe connects to the manhole. The storm sewer pipe must be installed to the current Standard Specifications for Utility and Street Construction.

C. Catch basins should be constructed such that the casting is installed integral with the concrete curb and gutter, unless otherwise approved by the City. The castings used shall be Neenah R-3067, with surmountable curb and gutter and Neenah R-4342 for off road locations. Catch basin manholes shall be constructed per Plat No. 3101, and standard catch basins per Plate No. 3102.

D. Storm sewer pipe discharging into ditches, storm ponds, lakes, wetlands, etc. should have flared end sections placed at the end of pipe with trash guards and grouted rip-rap per Plate No. 3110.

3. GRADING

A. Erosion control measures should be shown on the site plan and be approved by the Engineering Department prior to beginning grading operations. If grading is to take place prior to building permit issuance, a permit is required from the Engineering Department.

B. Geotextile fabric shall be used on steep grades, around catch basins, etc. The type and location of the fabric should be shown on the site plan.

C. The developer/builder will be responsible to protect existing waters and/or storm systems from sedimentation. Failure to do so will require the developer/builder to clean up the sediment or the City may draw upon the surety to correct the situation.

D. An on-site temporary or permanent sedimentation pond will be required where deemed necessary by the City Engineer.

4. SANITARY SEWER AND WATER SERVICES

A. All utility connection charges must be paid prior to issuance of the water meter. The connection charge amount will be given to the builder at the time of building permit issuance.

B. Sanitary sewer and water services should be shown on the site plan in detail. Information such as the size and type of service, invert and riser elevations, type of castings, etc. should be shown on the site plan.

C. Watermain can be constructed using ductile iron pipe, PVC pressure pipe conforming to AWWA C900, or H.D.P.E. pipe. Ductile iron pipe shall be encased with a polyethylene film conforming to ASTM D1248-889.

D. All utility construction shall be done in accordance with Maple Grove's Standard Specifications for Street and Utility Construction.

E. It will be the site plan preparer's responsibility to obtain information on existing utility locations from the City and relate this information to the bidders of the project and/or contractor constructing said services.

F. Post indicator valves should only be used on fire services, or placed after the connection for domestic water usage.

5. GENERAL REQUIREMENTS

A. If public streets and utilities are required to serve the proposed site, the improvements must be installed by the City of Maple Grove. A surety in the amount of 40% of the estimated construction costs will be necessary to guarantee the payment of special assessments.

B. The developer will be required to enter into a performance agreement (and/or a development agreement if City improvements are necessary) prior to issuance of the building permit.

C. If there are conditions of approval when the site plan is approved by City Council, the appropriate changes must be made to the site plan prior to building permit issuance.

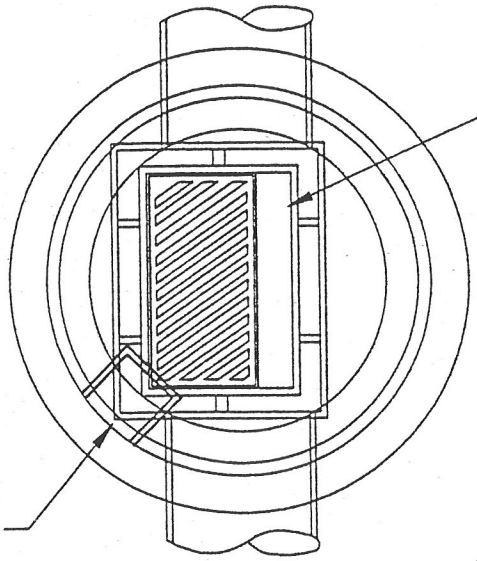

PLAN

24"x36" slab opening for Neenah R3067 or equal

Dimension from back of curb to center of pipe.
4' Dia. MH – 9" in from Back of Curb
5' Dia. MH – 3" in from Back of Curb
6' Dia. MH – 3" behind Back of Curb
7' Dia. MH – 9" behind Back of Curb
8' Dia. MH – 15" behind Back of Curb

Neenah R3067 casting or equal
Neenah R3290A if in a Driveway
Neenah R4342 (beehive) for off road locations

Minimum of 2 maximum of 6 concrete adjustment rings with full bed of mortar between each.

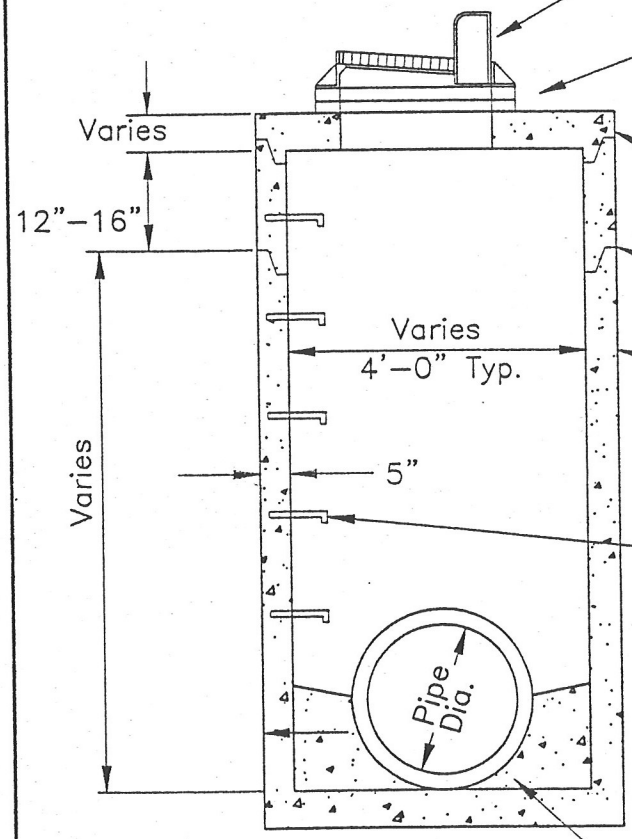

Precast reinforced concrete slab with "O" ring rubber gasket

All joints in manhole to have "O" ring rubber gaskets.

Precast concrete section

Doghouses shall be grouted on both the outside and inside.

Manhole steps, Neenah R1981N or equal, 16" on center. Copolyer Polypropylene plastic (PSI–PF) and Aluminum steps approved.
Steps to be aligned over street side corner of catch basin frame.

Minimum slab thickness, 6" for 14' depth. Increase thickness 1" for each 4' of depth greater than 14', and reinforce with 6"x6" 10/10 mesh.

SECTION

Grout bottom to 1/2 dia. of pipe

City of MAPLE GROVE	CATCHBASIN MANHOLE

Last Revision: Feb. 1997		Plate No. 3101

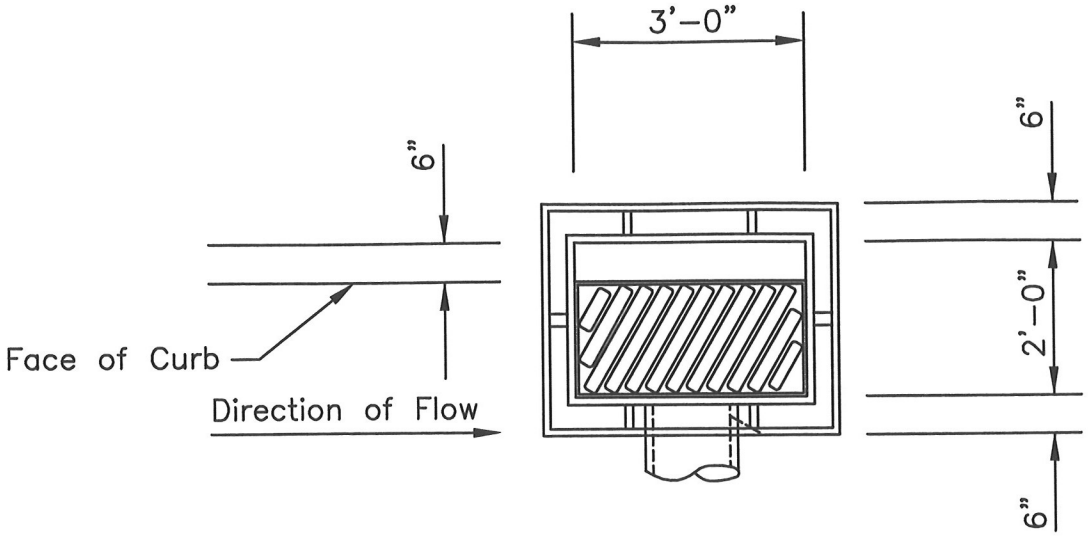

PLAN

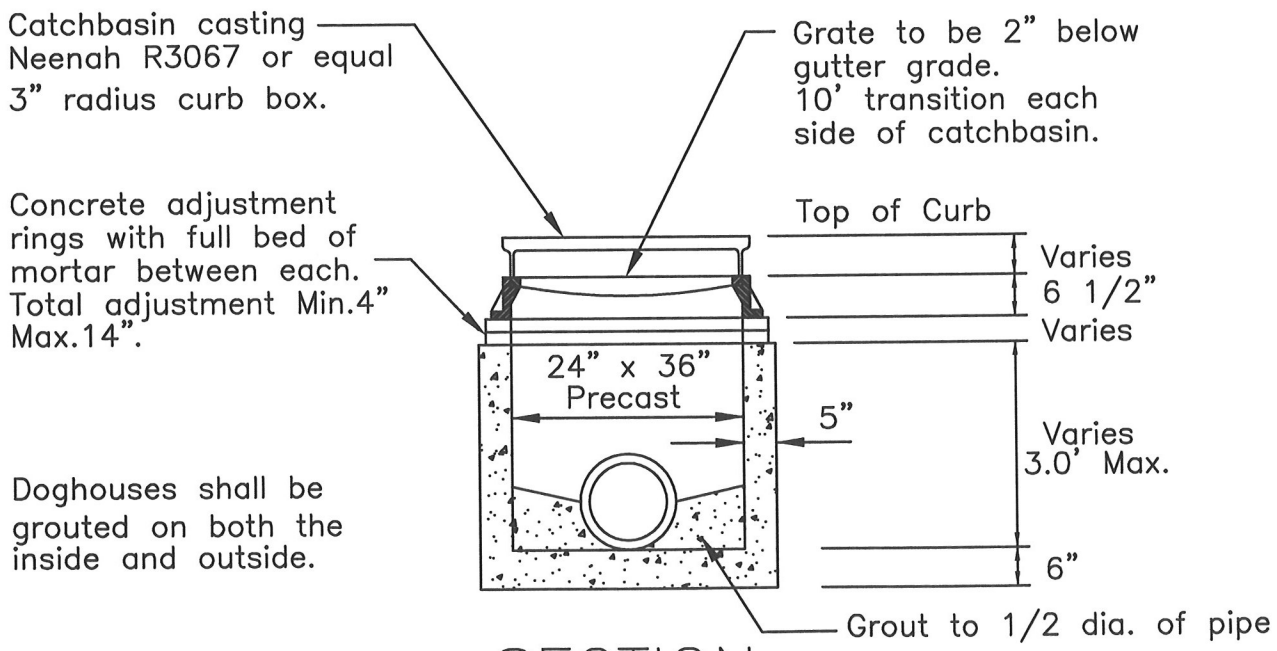

SECTION

NOT TO SCALE

S:\AV_DATA\TIFF\Leaftext.tif

ENGINEERING DEPARTMENT (763) 494-6350

CATCH BASIN
2' x 3' RECTANGULAR

Last Revision		Plate Number
April 1999		3102

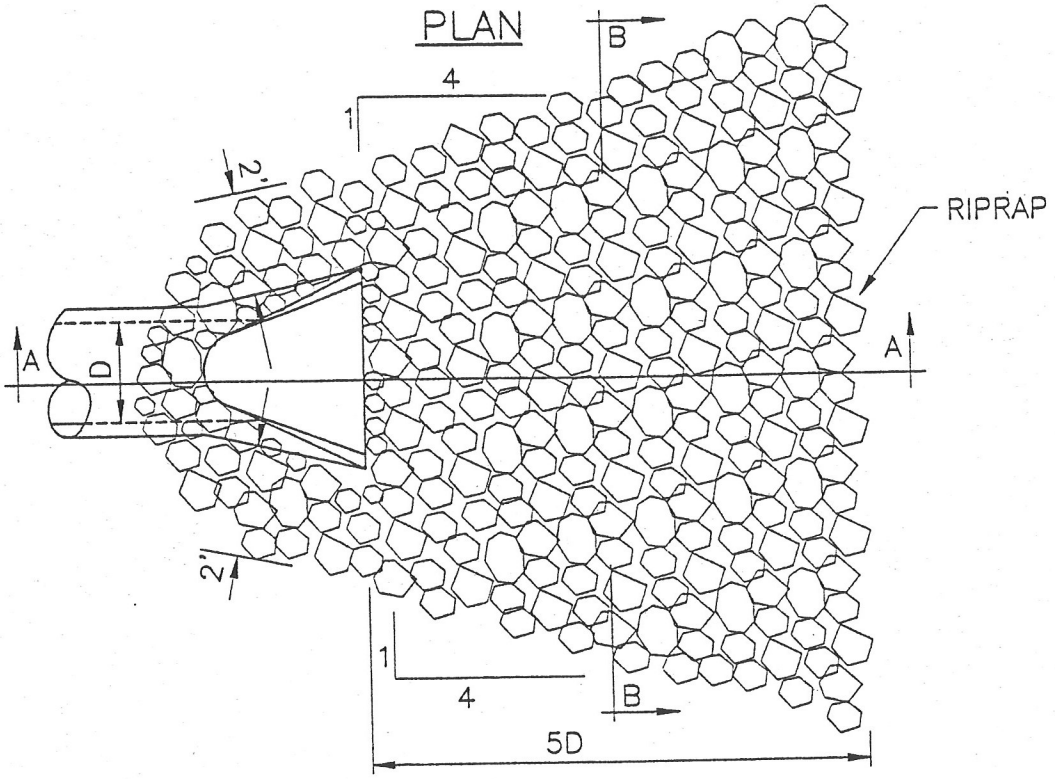

RIPRAP Rquirements – 1' Thick		Filter Blanket	Geotextile Filter Type III
12" TO 24"	5 to 8 CY CL.2	2 to 2.5 CY	5 to 8 SY
27" TO 33"	9 to 13 CY CL.3	3 to 6 CY	9 to 13 SY
36" TO 48"	15 to 25 CY CL.3	4.4 to 6.7 CY	15 to 25 SY
54" AND UP	41 CY and up CL.4	7.9 to 20 CY	41 and up SY

(One cubic yard is approximately 2,800 lbs.)

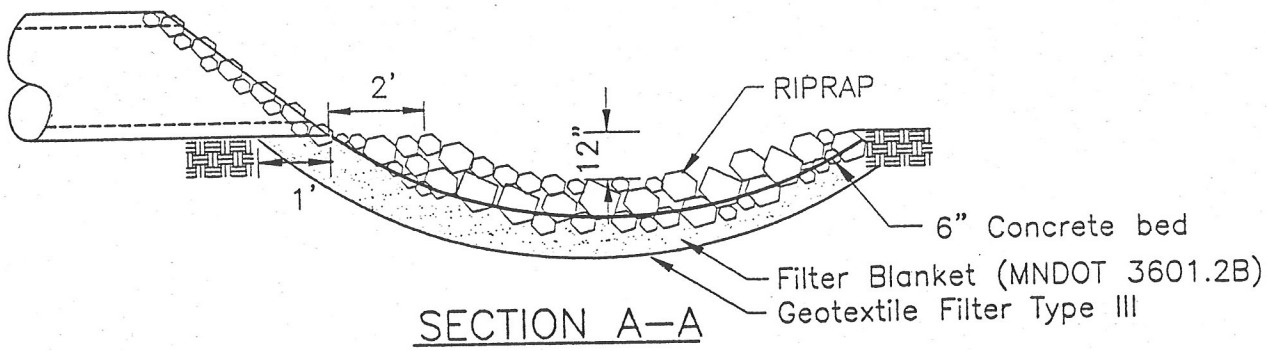

SECTION A–A

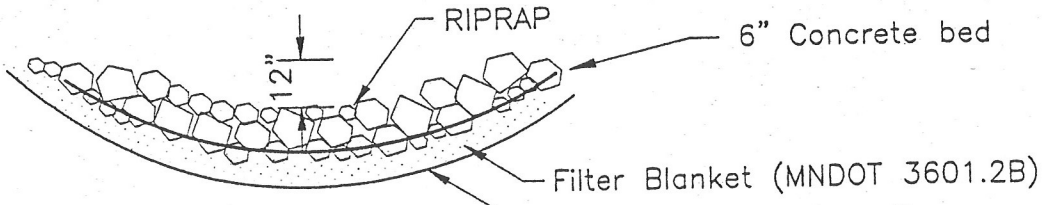

SECTION B–B

City of MAPLE GROVE

FLARED END SECTION WITH GROUTED RIP RAP

Last Revision: Feb. 1997

Plate No. 3110

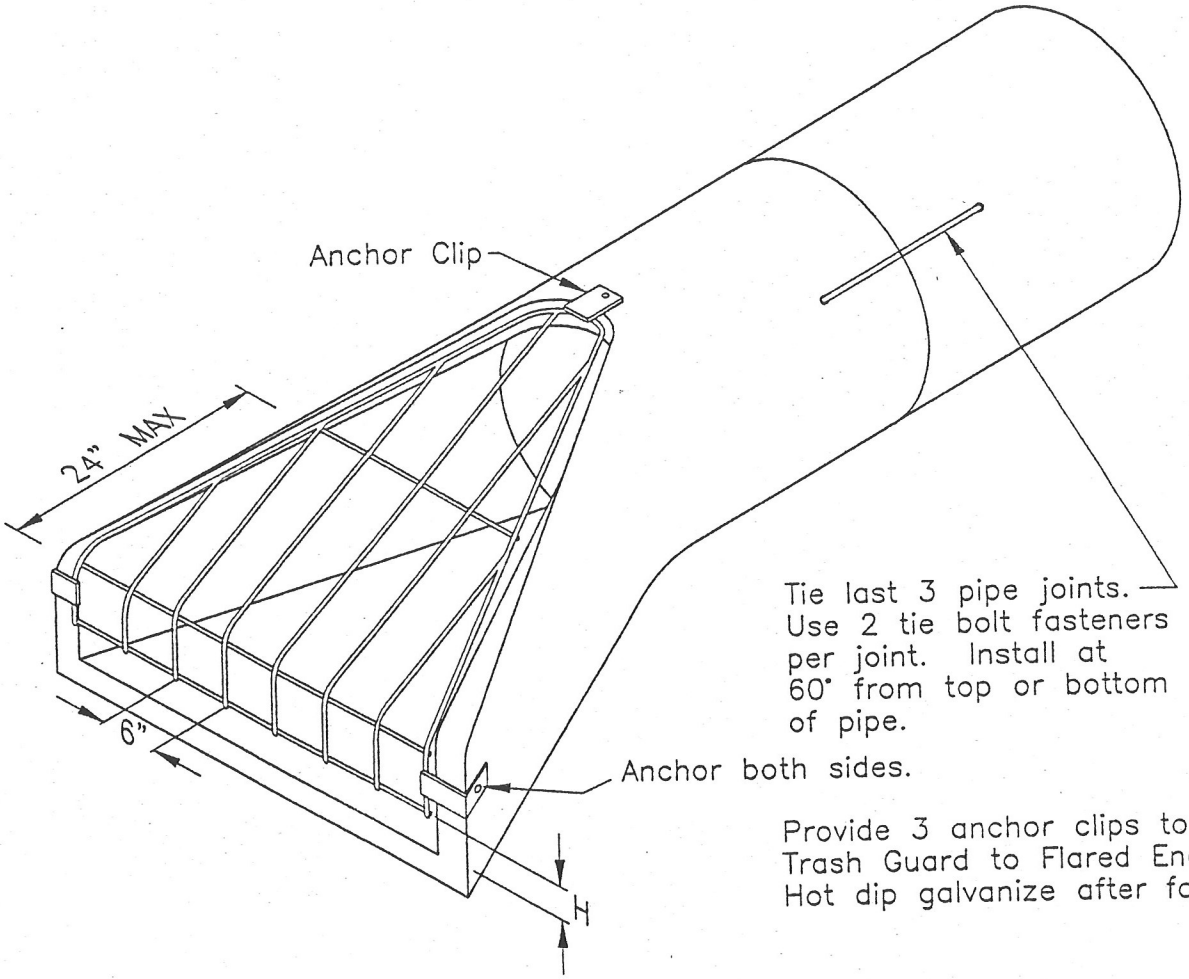

Provide 3 anchor clips to fasten Trash Guard to Flared End Section. Hot dip galvanize after fabrication.

ISOMETRIC

TRASH GUARD SIZING

Pipe Size	Bars	'H'	Bolts
12"–18"	5/8"ø	6"	5/8"
21"–42"	3/4"ø	6"	3/4"
48"–72"	1"ø	12"	1"

City of MAPLE GROVE

FLARED END SECTION WITH TRASH GUARD

Last Revision: Feb. 1997

Plate No. 3110 A

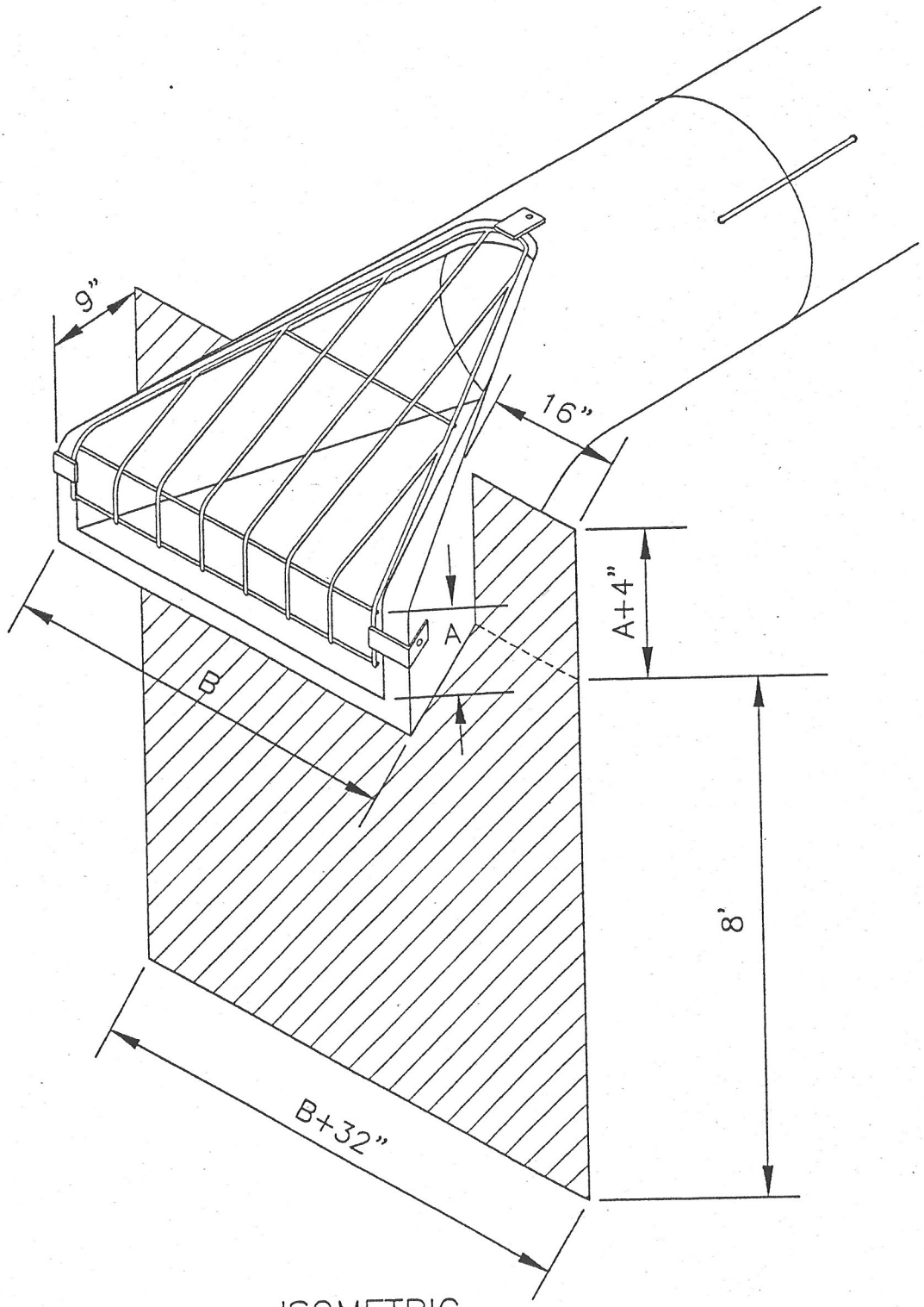

ISOMETRIC

City of
MAPLE GROVE

FLARED END SECTION
WITH STEEL SHEETING

Last Revision:
Feb. 1997

Plate No.
3110 B

Concrete slab shall be 6" thick,
reinforced with 6/6 welded wire fabric
or 8" thick non-reinforced,
on 4" compacted class 5 gravel base.

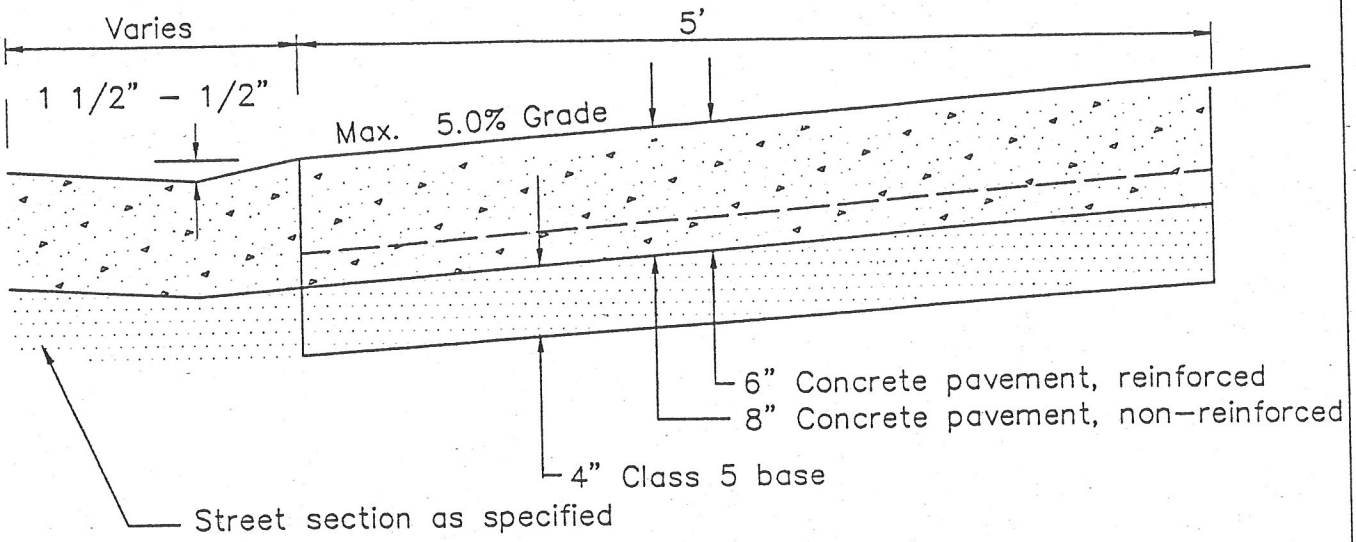

SECTION A–A

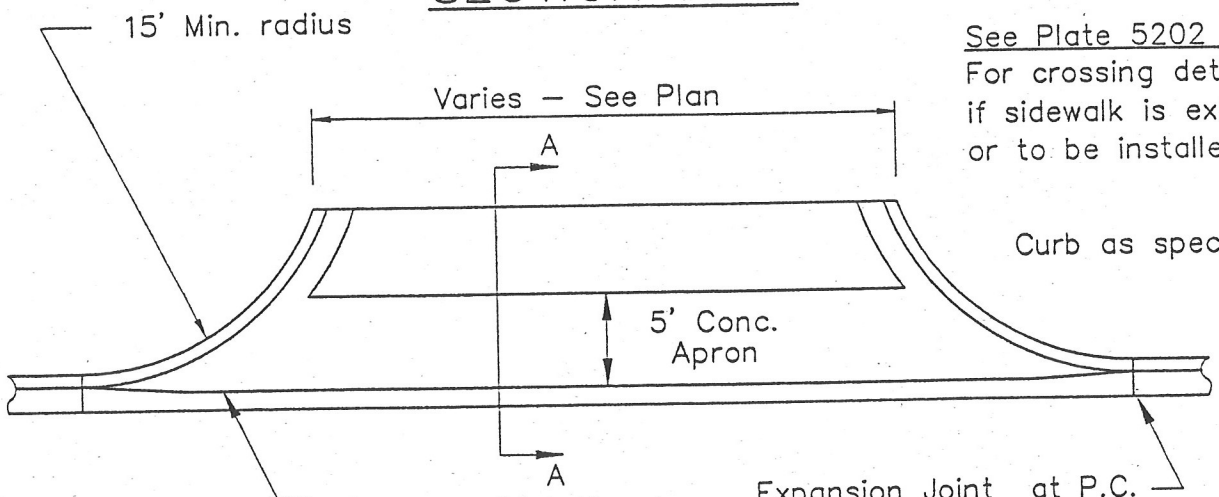

See Plate 5202
For crossing details
if sidewalk is existing
or to be installed.

Curb as specified.

PLAN

City of MAPLE GROVE	INDUSTRIAL / COMMERICAL DRIVEWAY APRON	
Last Revision: Feb. 1997		Plate No. 5207

STANDARD INSTALATION
REGULAR FLOW

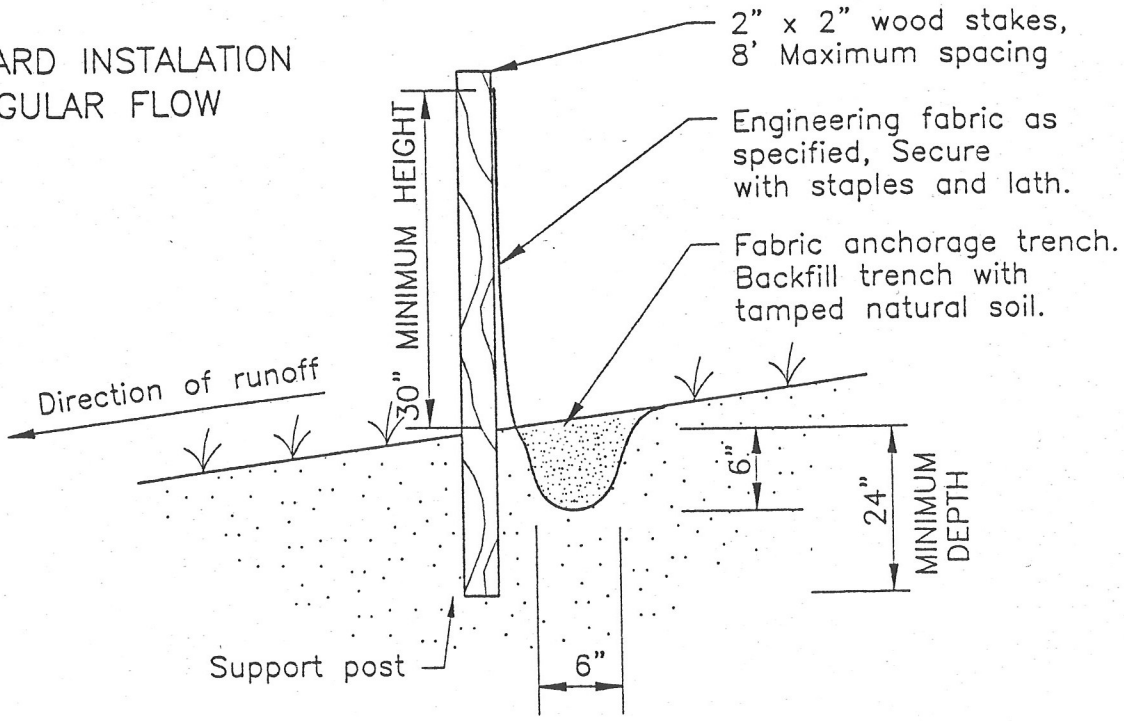

HEAVY DUTY
HIGH FLOW AREAS

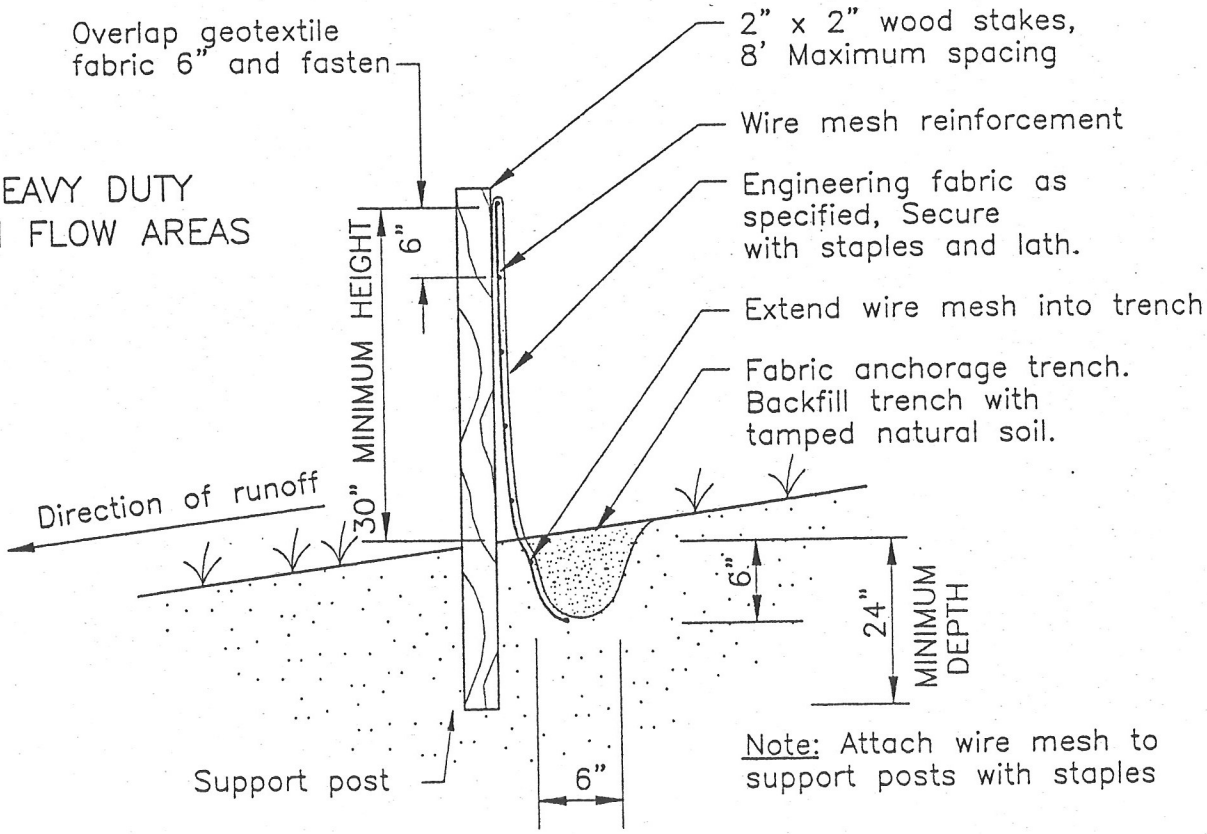

Note: Attach wire mesh to support posts with staples

City of
MAPLE GROVE

SILT FENCE

Last Revision: Feb. 1997		Plate No. 5212

City of Maple Grove

Watershed Districts

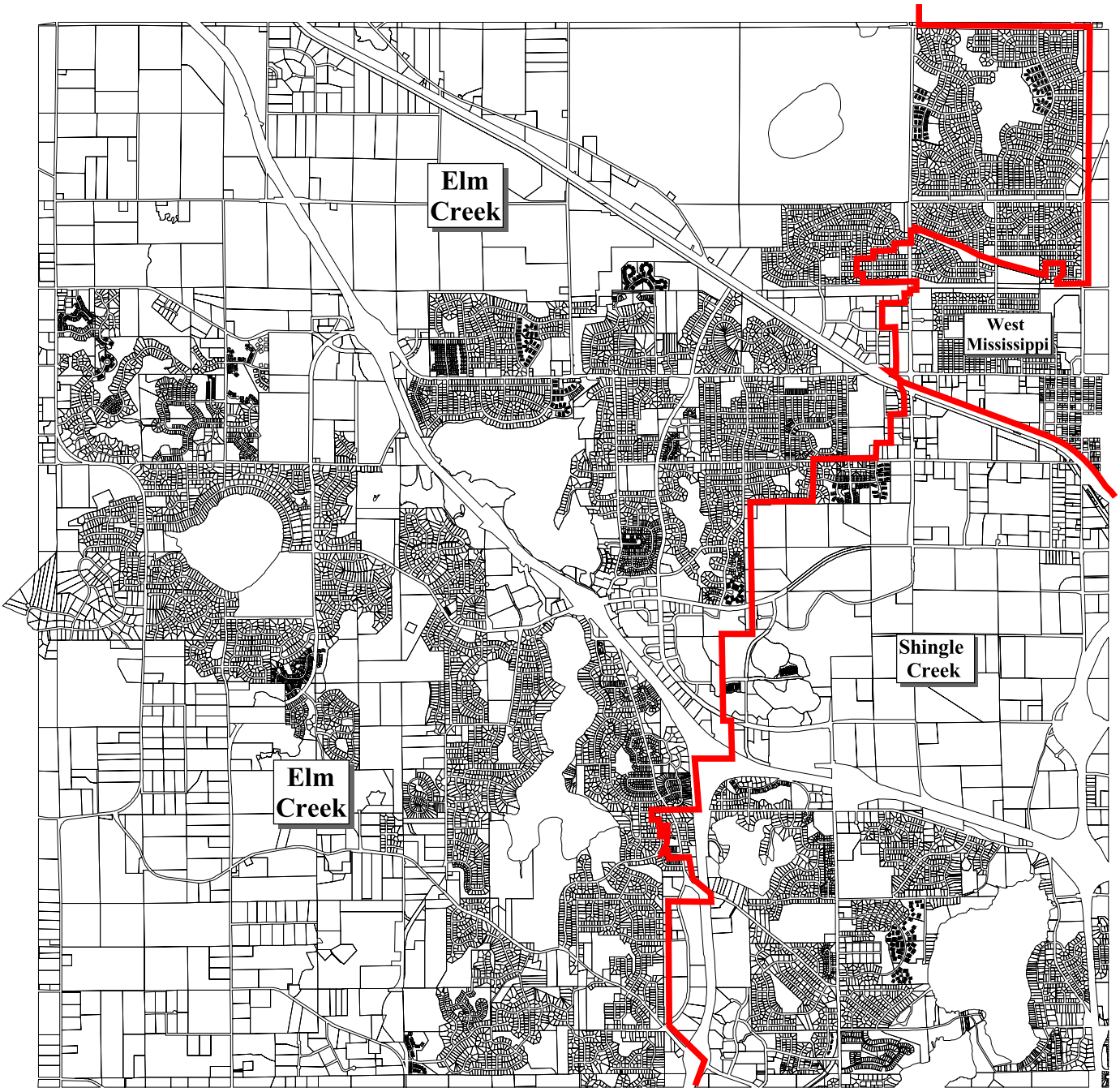

Elm Creek Watershed Management Commission
Plan Review Requirements

The Commission requires submittal of plans for activities that may impact the natural resources of the watershed. The information below lists the requirements of the Commission for review and approval of plans. Complete applications must be submitted ten (10) working days prior to the meeting date for consideration at the Commission meeting. Applicants must present all of the items below prior to consideration by the Commission. The Commission meets on the second Wednesday of each month at 3:00 p.m. at the Plymouth City Hall. One full-size and one reduced copy (11" x 17") of the plan must be submitted to the City along with the application form and appropriate fee. The City will forward the plans to the Hennepin Conservation District to be reviewed on behalf of the Commission.

Erosion and Sediment Control

An erosion and sediment control plan is required for the following type of developments:

1. Any development that is fully or partially within a site classified as a Critical Construction Site Erosion Area in the Elm Creek Watershed Plan (Chapter VI, pp. 1-16), **This covers pretty much everything.
2. All commercial/industrial subdivisions or site plan developments,
3. All residential subdivisions greater than 20 acres in size with more than two dwelling units per acre,
4. All residential subdivisions, regardless of size, with more than three dwelling units per acre.

The plan must be forwarded with the following information for review, comment and approval:

- An erosion and sediment control plan prepared by a qualified individual, shall show proposed practices, time of implementation of those practices relative to other construction activities (sequencing plan), and maintenance of those practices for retaining waterborne sediments on-site during the period of construction. The plan shall show how the site will be restored, covered, or revegetated after construction. Details for each practice must be shown on the plans. The plan must include identification of all temporary and permanent erosion control measures that will remain in place until permanent vegetation is established. Examples include, but are not limited to seeding, mulching, sodding, silt fence, erosion control blankets, temporary diversions, rock check dams (hay bale check dams may not be used), and riprap protection. The plan must comply with the provisions set forth in the MPCA or HCD manuals.
- Property lines and delineation of lands under ownership of the applicant and the work areas,
- Delineation of wetlands, existing drain tiles and ditches, waterways, shoreland and floodplain areas,
- Delineation of forested areas,
- Existing and proposed site contour elevations at two-foot intervals, related to the NGVD 1929 datum, within 100 feet of the site,
- Proposed and existing stormwater facilities location, alignment and elevation,
- Identification of all temporary and permanent erosion controls,
- Identification of waterway or waterbody where stormwater runoff will be discharged,
- A plan showing that the lowest floor elevation of all new residential, commercial or industrial structures are a minimum of two (2) feet above the established 100-year high water elevation (if the site is within mapped flood plain or upland storage area),
- Computation of change in flood storage capacity resulting from proposed grading elevation (if the site is within mapped flood plain or upland storage area),

Following are not required by the Commission but may be required by the Cities or due to State regulations:

- Copy of the MPCA NPDES stormwater permit application if greater than 5 acres disturbed (threshold will change to 1 acre),
- Documentation that stormwater facilities will be maintained by the City or another party,
- Geotechnical soil boring results if available,

- Identification of Ordinary High Water (OHW) and shoreland zone for streams and lakes (300' from stream and 1000' from lake),
- Location of all on-site septic treatment systems,
- Identification of all private wells.

Stormwater Management

Quantity

Plans must include drainage areas, direction of runoff, and computations for runoff before and after development, and with peak control. Development in the Elm Creek watershed shall not alter the peak discharge and timing of runoff resulting from a 2-, 10-, and 100-year rainfall event of the critical duration for that subwatershed. This requirement applies to developments that propose to change the 1990 Land Use Plan, as approved in the Management Plan.

Identify the waterway or lake that the site will discharge to.

Quality

- For all new residential development, platting or replatting, of 5 acres or more and having a density equal to or greater than 1 unit per acre and all new commercial and industrial development larger than 1 acre, **within a critical lake drainage basin** (Elm Creek Watershed Management Plan, Chapter VIII, pp. 1-35) shall treat stormwater runoff to at least the Nationwide Urban Runoff Program (NURP) design criteria for wet detention ponds.
- A water quality protection plan, prepared by a qualified individual, shall delineate and identify drainage areas based on the elevations proposed in the grading plan and the proposed stormwater conveyance system for each area. The plan shall include details for all best management practices proposed for treatment of runoff from the site. The plan shall also include a schedule of implementation for the proposed treatment practices.
- For sites where NURP or other ponds are required or are used for water quality treatment, a detailed plan and sizing computations for the pond must be submitted along with outlet details, normal water and high water elevations, bench slopes and average depth.
    - All residential development ponds will be sized to hold 0.5 inches of runoff from the entire watershed,
    - All commercial/industrial development ponds will be sized to hold 2.5 inches of runoff from the impervious portion of the development.

In addition to the exhibits listed above and required under Erosion and Sediment Control, the following must be included with the plans:

- Delineation of the subwatershed contributing runoff from off-site and proposed and existing subwatersheds on-site.
- Proposed and existing stormwater conveyance systems including location, alignment and elevation.
- Existing and proposed 100-year water elevations on site.
- Identification, description, permeability and approximate delineation of site soils in both existing and proposed as-developed conditions, for applications proposing infiltration as a stormwater management practice.
- Construction plans and specifications of all proposed stormwater management facilities
- Stormwater runoff volume and rate analyses for the 2-, 10- and 100-year critical events, existing and proposed conditions, with peak control.
- All hydrologic, water quality and hydraulic computations completed to design the proposed stormwater management facilities.
- For stormwater treatment ponds, contour and primary and emergency outlet details, normal and high water levels (NWL and HWL).
- Delineation of any flowage easements or other property interests dedicated to stormwater management purposes, including, but not limited to, county or judicial ditches.

Wetlands

The Commission is the Local Governmental Unit for administering the Wetland Conservation Act (WCA) for the municipalities of Corcoran and Champlin, and Hassan Township. If wetland alteration is proposed, request a copy of the Commission's WCA requirements and fees.

- A wetland delineation report must be submitted for projects in the above municipalities before the final plat stage. Wetland delineations must be completed May 1 to October 31.
- Exemption and no-loss certificates are required for all exempt activities.
- A wetland replacement plan is required for any non-exempt filling or draining.

Floodplain Alteration

Any fill within the mapped 100-year flood plains and upland storage areas must be mitigated on a 1:1 volume basis. If any fill is proposed, a mitigation plan must be submitted which shows location, proposed and existing elevations and earthwork cut-and-fill volumes for the filled and mitigation areas. An as-built survey must be submitted showing that the project has fulfilled the mitigation requirements. Any fill or floodplain alteration must not change the flood stage or the timing of the flood.

Drainage Alteration

For any proposed culvert or bridge installation or replacement in waterways, submit plans showing the following (the Commission has to comment on activities proposed in or near DNR protected waters through DNR permit review process):

- Location of installation
- Diameter, length and type of culvert, proposed invert elevations, bridge details, etc.
- For replacements also include existing bridge details, culvert diameter, length, type and invert elevations
- Hydrologic computations

Pond Excavation (wildlife pond)

Submit Combined Project Notification Form and include drawing of proposed pond, depth, and location on site and location where dredge spoils will be disposed.

Water Appropriation

A permit is required for appropriation of waters for non-essential uses. (Request separate permit form)

Technical Advisor	Administrative Office
Elm Creek Watershed Management Commission **c/o Hennepin Conservation District** **6900 Wedgwood Road, Suite 140** **Maple Grove, MN 55311-3176**	**Judie A. Anderson** **3235 Fernbrook Lane** **Plymouth, MN 55447**
Phone: 763-420-2157 **Fax: 763-494-3176** **Email: ali@hcd.hennepin.mn.us**	**Phone: 763-553-1144** **Fax: 763-553-9326** **Email: judie@jass.biz**

Elm Creek Watershed Management Commission
Project Review Fee Schedule and Worksheet

I.	No applications will be reviewed until the Commission receives a completed application form, all appropriate materials, and fees.						**Amount Due**
II.	**Application Fee**						**$ 50.00**
III.	**Project Reviews[1]**						
	A.	**Grading and Erosion Control**					
		1	Residential development or redevelopment >1.0 acre				
			a	>1.0 - 5.0 acres	250		
			b	>5.0 - 10.0 acres	500		
			c	PLUS each additional five acres or fraction thereof	100	5,000 maximum	
		2	Commercial/industrial/institutional/governmental agency development project				
			a	≤ 1.0 acres	250		
			b	>1.0 - 5.0 acres	500		
			c	PLUS each additional five acres or fraction thereof	250	5,000 maximum	
		3	Commercial/industrial/institutional/governmental agency redevelopment project resulting in				
			disturbance of >1.0 acre or increase in impervious area [2] of >0.5 acre)				
			a	≤ 1.0 acres of disturbance	250		
			b	>1.0 - 5.0 acres of disturbance	500		
			c	PLUS each additional five acres or fraction thereof of disturbance	250	2,500 maximum	
	B.	**Water Quantity and Quality**					
		1	Residential development or redevelopment on site ≥8 acres with density[3] of <2 units per acre				
			a	8.0-10.0 acres	250		
			b.	PLUS each additional five acres or fraction thereof	150	2,500 maximum	
		2	Residential development or redevelopment on site >5 acres with density of >2 units per acre				
			a	5.0-10.0 acres	500		
			b	PLUS each additional five acres or fraction thereof	250	5,000 maximum	
		3	Commercial/industrial/institutional/governmental agency development on site ≥ 1.0 acre				
			a	1.0-5.0 acres	500		
			b	PLUS each additional one acre or fraction thereof	300	10,000 maximum	
		4	Commercial/industrial/institutional/governmental agency redevelopment on site ≥ 1.0 acre,				
			resulting in net increase in new impervious area >0.5 acre				
			a	0.5 - 1.0 acre increase in new impervious area	250		
			b	1.0 - 5.0 acre increase in new impervious area	500		
			c	PLUS each additional one acre of new impervious area or fraction thereof	300	10,000 maximum	
		5	Trail, road, street or highway project resulting in a net increase in new impervious surface area >1.0 acre				
			a	1.0 - 1.99 acres new impervious surface	500		
			b	PLUS each additional one acre or fraction thereof	250	5,000 maximum	
	C.	**Developments with mapped floodplains on site**					
		1	No impact or impacts ≤ 100 cubic yards		100		
		2	Impacts > 100 cubic yards		500		
	D.	**Drainage alterations** - Any culvert installation or replacement, bridge construction, stream cross-section alteration,					
		or activity requiring a DNR Waters Permit					
		1	on Elm, Rush, North Fork Rush, or Diamond Creeks		500		
		2	on all other tributaries within the watershed		100		
	E.	**Water appropriation permits (two years)**			50		
IV	**Wetland Project Fees**						
	F.	Wetland fees apply in the communities (Champlin, Corcoran and Hassan Township) where the Commission					
		is the LGU for the Wetland Conservation Act (WCA) and are in addition to the project fees.					
		1	Exemption certificates		100		
		2	Determinations		100		
		3	Delineation review		250		
		4	Pond Excavations		100		
		5	Wetland replacement plans <10,000 SF impact on single basins or <1/4 acre impact for private driveways		400		
		6	All other replacement plans		2,500		
		7	Replacement plan in conjunction with wetland banking		3,500		
			a	All other wetland banking applications	3,500		
		Additional wetland replacement plan and banking application escrows and sureties are determined					
		on a site-specific basis. (See page 3.)					
V.	**Failure to make application and receive approval prior to beginning work results in doubling of fees**						
						Total fees	*1*
						Double fees if V. applies	*2*
						Total due (Line *1* *or* *2*)	

[1] **The following projects require review:** Any residential project >1.0 acre; any commercial/industrial/institutional project; any project where there are floodplains or drainage alterations; any project with wetlands in a community where the Commission Statutory reviews are exempt from review fees.

[2] Impervious area includes any compacted gravel surface such as road shoulders, parking lots and storage areas.

[3] **Density** = number of units per buildable area prior to development. **Building area** = area excluding wetlands and floodplains. Rights-of-way are included in buildable area. Acreage is based on total lot size unless noted.

Elm Creek Watershed Management Commission
Request for Plan Review and Approval

Administrative Office
3235 Fernbrook Lane
Plymouth, MN 55447
Ph: 763-553-1144
Fax: 763-553-9326
Email: judie@jass.biz

Date:_____

Fee Submitted: $_____

*Please **Print** Clearly*

Applicant:_____

Address:_____

City:_____ Zip Code:_____

Phone: ( )_____ Fax: ( )_____ Email:_____

Agent:_____

Address:_____

City:_____ Zip Code:_____

Phone: ( )_____ Fax: ( )_____ Email:_____

Application for Approval of: *(check all the applicable items)*

☐	Residential Development	☐	Road Construction	☐	WCA Exemption Certificate
☐	Commercial/Industrial Development	☐	Wetland Determination	☐	Wetland Replacement Plan
☐	Floodplain Alteration	☐	Wetland Delineation	☐	Wetland Banking Application
☐	Drainage Alteration	☐	Wetland Alteration	☐	Pond Excavation
☐	Other (explain): _____	☐	**Issuance of General Permit**		

Project Name:_____

Project Location - City or Town:_____ PID#:_____

Total Acres:_____ Acres Disturbed:_____

Acres Impervious Before Development:_____

Acres Impervious After Development (incl. gravel roads and parking areas):_____

For Residential Developments: Number of Lots:_____ Lot Density:_____

Anticipated Project Start Date:_____

Remarks:_____

_____

Applicant's Signature:

Print Name:_____ **x**_____

In order for a project to be considered by the Commission, a complete application packet must be received in the Commission's administrative office at least TEN BUSINESS DAYS prior to the Commission's next regular meeting. Action by the Commission will be predicated on factors such as completeness of the application documents and complexity of the project, etc. The Commission normally meets on the second Wednesday of the month.

Submit this form to the City along with three copies of the required plans and the appropriate fee (check made payable to "Elm Creek Watershed Management Commission"). The City will forward two copies and the fee payment to the Commission. The Commission will transmit a letter to the applicant following approval. For submittal requirements, see the Commission Plan Review Requirements packet. A copy of this form and the fee schedule can be downloaded from: http://www.elmcreekwatershed.org/projrb.shtml

WATERSHED MANAGEMENT COMMISSIONS

3235 FERNBROOK LANE • PLYMOUTH, MN 55447
(763) 553-1144 • FAX (763) 553-9326

- Exhibit A - *- Exhibit A -*

Fee Schedule

This fee schedule is adopted in accordance with Rule J of the Rules and Standards of the Shingle Creek and West Mississippi Watershed Management Commissions. ***It is effective January 1, 2006.***

Project Review Fees

Single Family Lot $300

Single Family Residential Development, density less than 3 units per acre
- Total Site <15 acres $1,250
- Total Site 15-29.99 acres $1,500
- Total Site ≥30 acres $2,000

All Other Development
- Total Site <5 acres $1,250
- Total Site 5-9.99 acres $1,500
- Total Site 10-19.99 acres $2,000
- Total Site ≥20 acres $3,000

Variance Escrow $2,000

Street/Highway/Utility Project $1,000

Note: Total site area includes wetland, buffer, right of way and other nondeveloped areas.

Wetland Fees

Wetland Delineation Review $300

Wetland Replacement Plan Escrow $1,500

Monitoring and Reporting Deposit $1,500

Wetland Replacement Deposit ..... Varies

J:\Shingle Creek\Projects\Project Review Fees\Review Fees_2006_ExhibitA.wpd

SHINGLE CREEK WATERSHED MANAGEMENT COMMISSION

PROJECT REVIEW APPLICATION

(For Office Use Only)

Application No. _____

Date Received _____

OWNER

Name _____

_____

_____

Address _____

_____

_____

Phone _____

NATURE OF REVIEW

☐ Wetland Alteration
(DNR Protected or WCA Regulated with Commission Designated LGU)

☐ Floodplain Alteration

☐ Stormwater Management Plan
(Sites >5 acres for non-single family or >15 acres for single family detached)

☐ Other _____

_____

PROJECT INFORMATION

Name _____

Location _____

_____

_____

Area of Property _____ Acres

Project Description _____

_____

Fees

☐ Project review fee $_____

☐ $2,000 escrow for variance application

☐ $1,500 escrow for wetland replacement plan when Commission is LGU

Project Engineer

Name _____

Company _____

Phone _____

Fax _____

AUTHORIZATION - To be completed by City

Requested by City of _____

Signature _____

Name _____

Title _____

Date _____

Send completed application to:

Shingle Creek Watershed Management Commission
c/o Wenck Associates, Inc.
1800 Pioneer Creek Center
PO Box 249
Maple Plain, MN 55359-0249 Ph: 763-479-4200
Fax: 763-479-4242

Include with application grading plan with erosion control, stormwater calculations, fees or escrows, mitigation plans, and other related information.

WEST MISSISSIPPI WATERSHED MANAGEMENT COMMISSION

PROJECT REVIEW APPLICATION

(For Office Use Only)

Application No. _____

Date Received _____

OWNER

Name _____

_____

_____

Address _____

_____

_____

Phone _____

NATURE OF REVIEW

☐ Wetland Alteration
(DNR Protected or WCA Regulated with Commission Designated LGU)

☐ Floodplain Alteration

☐ Stormwater Management Plan
(Sites >5 acres for non-single family or >15 acres for single family detached)

☐ Other _____

_____

Fees

☐ Project review fee $_____

☐ $2,000 escrow for variance application

☐ $1,500 escrow for wetland replacement plan when Commission is LGU

PROJECT INFORMATION

Name _____

Location _____

_____

_____

Area of Property _____Acres

Project Engineer

Name _____

Company _____

Phone _____

Fax _____

Project Description _____

_____

AUTHORIZATION - To be completed by City

Requested by City of _____

Signature _____

Name _____

Title _____

Date _____

Send completed application to:

West Mississippi Watershed Management Commission
c/o Wenck Associates, Inc.
1800 Pioneer Creek Center
PO Box 249
Maple Plain, MN 55359-0249 Ph: 763-479-4200
Fax: 763-479-4242

Include with application grading plan with erosion control, stormwater calculations, fees or escrows, mitigation plans, and other related information.

City of Maple Grove

Landscape Tree Suggestions

The following document is split into multiple sections. Native selections are listed first and grouped into three sizes, followed by non-native species. The species designated below as 'native' were identified from multiple references including the MN DNR. Native plants are best-adapted to the local environment, providing habitats for wildlife, especially birds and butterflies. Some natives produce nuts and fruits that both humans and wildlife can enjoy!

Additional information can be found on the Arbor Committee web site: ***www.ci.maple-grove.mn.us/arbor/arbpq1.htm***

Native Deciduous – small

	At Maturity				Tolerance to:			
Common Name (Latin)	**Height**	**Spread**	**Growth Rate**	**Light Preference**	**Salt**	**Wet**	**Drought**	**Comments & Notable Varieties**
1. Alder, Speckled *(Alnus rugosa)*	15-20'	15-20'	F	☼	L	H	L	Needs moist conditions. Improves soil fertility with nitrogen. Dark purple fruit persists on wood that turns orange in winter. Age 25-50 years.
2. Bladdernut, American *(Staphylea trifolia)*	10-15'	10-15'	M	☼	L	I	I	Interesting 1-2" seed pods. Yellow fall color.
3. Blue Beech *(Carpinus caroliniana)*	15-18'	15-20'	S	☼ ◐ ●	L	L	L	Also called American Hornbeam. Good fall color; interesting bark. Understory tree. Age 50-75 years.
4. Dogwood, Gray *(Cornus racemosa)*	8-12'	6-10'	M	☼ ◐ ●	L	H	L	White flowers, white fruit, purple-red fall color. May colonize.
5. Dogwood, Pagoda *(Cornus alternifolia)*	15-25'	20-25'	S	☼ ◐	L	I	L	White spring flowers; interesting horizontal branching pattern. Beneficial for butterflies.
6. Eastern Wahoo *(Euonymus atropurpurea)*	20-25'	10-15'	M	☼	L	H	I	Twigs have corky ridges or wings. Red fall color. Pinkish fruit. Age 25-50 years.

KEY:

Growth Rate:	F – Fast	M- Moderate	S- Slow
Light:	☼ Full Sun	◐ Part sun/part shade	● Shade
Tolerance:	H – High	I –Intermediate	L – Low

Common Name (Latin)	At Maturity Height	At Maturity Spread	Growth Rate	Light Preference	Tolerance to: Salt	Tolerance to: Wet	Tolerance to: Drought	Comments & Notable Varieties
7. Hawthorn, Cockspur *(Crataegus crusgalli)*	15-18'	20-25'	M	☼	I	L	H	Bright red fruit; Seek out thornless varieties. Deer usually avoid eating. Beneficial for butterflies. Age 50-100 years.
8. Ninebark, Common *(Physocarpus opulifolius)*	8-10'	8-10'	M	☼	I	L	I	Dense growth.
9. Serviceberry *(Amelanchier spp.)*	15-25'	10-15'	M	☼	H	H	L	White flowers in spring; good fall color. Very high wildlife value, bird magnet. Edible fruit. Consider Downy (*A. arborea*) or Allegheny (*A.laevis*) varieties.
10. Buffaloberry, Silver *(Shepherdia argentea)*	8-10'	8-10'	M	☼	I	H	L	Silvery, light green leaves. Berries in late summer.
11. Viburnum, Arrowwood *(Viburnum dentatum)*	6-8'	6-8'	M	☼ ◐ ●	I	L	I	Very shade tolerant. Also recommended varieties: Witherod Viburnum (*V. cassinoides*) or Mapleleaf Viburnum (*V. acerifolium*)
12. Viburnum, Nannberry *(Viburnum lentago)*	16-20'	10-20'	F	☼ ◐ ●	L	H	L	White flowers. Rose-pink fruit turns blue-black. Purple-red fall color. Edible fruit, but large central pit. Often along forest edges, swamps. Age 10-20 years.

Native Deciduous – medium

Common Name (Latin)	At Maturity Height	At Maturity Spread	Growth Rate	Light Preference	Tolerance to: Salt	Tolerance to: Wet	Tolerance to: Drought	Comments & Notable Varieties
1. Ironwood or Hophornbeam *(Ostrya virginiana)*	30-35'	25-30'	S	☼ ◐ ●	L	I	H	Tolerates wide range of soil/light conditions (grows faster in more sun). Attractive catkins resemble 'hops'. Holds leaves into winter. Age 75-100 years.
2. Linden, Littleleaf *(Tilia cordata)*	35-50'	20-30'	M	☼ ◐ ●	I	I	I	Excellent shade tree. Beneficial for bees and other wildlife.
3. Mulberry, Red *(Morus rubra)*	35-50'	35-50'	M	☼ ◐	L	H	I	Edible purple-red fruit. Golden yellow color in fall. Age 50-75 years.
4. Plum, American *(Prunus americana)*	20-35'	20-30'	F	☼	L	L	H	Produces sweet-spice scented white blooms. Edible fruit. Age 25-30 years.

KEY:

Growth Rate: F – Fast; M- Moderate; S- Slow

Light: ☼ Full Sun; ◐ Part sun/part shade; ● Shade

Tolerance: H – High; I –Intermediate; L – Low

ɹtive Deciduous – tall

Common Name (Latin)	At Maturity Height	At Maturity Spread	Growth Rate	Light Preference	Tolerance to: Salt	Tolerance to: Wet	Tolerance to: Drought	Comments
1. Aspen, Quaking *(Populus tremuloides)*	40-60'	20-30'	F	☼	M	H	L	Tolerates wide range of soils, avoid flooding. Bright yellow fall color. Age 60-80 years.
2. Birch, Paper *(Betula papyrifera)*	40-70'	20-40'	M	☼	I	H	L	Attractive white bark, yellow fall color. Choose insect-resistant cultivars. Age 80-100 years. Available in clump or single stem forms.
3. Birch, River *(Betula nigra)*	40-60'	30-40'	M	☼	I	H	L	Attractive bark. High wildlife value. Available in clump or single stem forms. Age 50-75 years.
4. Birch, Yellow *(Betula alleghaniensis)*	60'	30'	M	☼	L	I	L	Resistant to birch borer. Gorgeous fall yellow color. Age 100-125 years.
5. Butternut *(Juglans cinerea)*	40-60'	30-50'	M	☼	L	H	L	Gray bark color. Edible nuts. Age 80-100 years.
6. Cherry, Black *(Prunus serotina)*	50-60'	20-30'	S	☼ ◐	L	I	I	Found naturally along woodland edges. Edible fruit. Great wildlife value. Age 125-150 years
7. Cherry, Pin *(Prunus pensylvanica)*	20-35'	10-20'	M	☼	L	I	I	Attractive bark. Bright red-orange color in fall. Edible fruit. Great wildlife value. Age 20-40 yrs.
8. Coffeetree, Kentucky *(Gymnocladus dioicus)*	50-70'	30-50'	M	☼	H	I	H	Provides open shade; 4-8" long pods (female trees) create interest in winter. Age 50-75 years.
9. Hackberry *(Celtis occidentalis)*	40-60'	30-50'	M	☼ ◐ ●	I	I	H	Unique bark; adaptable. Persistent berries. High wildlife value. Age 100-150 years.
10. Hickory, Bitternut *(Carya cordiformis)*	50-75'	50-75'	S	☼ ◐	I	H	I	Yellow color in fall. Nuts produced are very bitter. Age 100-150 years.
11. Honey locust *(Gleditsia triacanthos)*	40-60'	40-60'	M	☼ ◐	H	L	H	Provides attractive "open" shade. Opt for thornless varieties: 'Moraine', 'Shademaster', or 'Skyline'. Age 100-125 years.
12. Linden *(Tilia Americana)*	50-75'	25-40'	F	☼ ◐ ●	L	H	I	Also called American Basswood. Excellent for larger sites. Age 150-200 years.
13. Maple, Red *(Acer rubrum)*	40-60'	30-50'	S	◐	L	H	L	Vivid fall color. Very high wildlife value. Often found in swamps/moist woods. Age 75-100 yrs.
14. Maple, Sugar *(Acer saccharum)*	40-60'	30-50'	M	☼ ◐ ●	L	L	L	Excellent fall color. Sap used for maple syrup. Leaves break down quickly. Age 150-200 years.
15. Oak, Bur *(Quercus macrocarpa)*	60-80'	60-80'	S	☼ ◐	I	I	I	Excellent tree for urban landscapes. Age 150-250 years. Edible acorns.

KEY:

Growth Rate: F – Fast M- Moderate S- Slow

Light: ☼ Full Sun ◐ Part sun/part shade ● Shade

Tolerance: H – High I –Intermediate L – Low

Common Name (Latin)	At Maturity Height	At Maturity Spread	Growth Rate	Light Preference	Tolerance to: Salt	Tolerance to: Wet	Tolerance to: Drought	Comments
16. Oak, Pin *(Quercus ellipsoidalis)*	50-70'	30-50'	M	☼	L	L	H	Good fall color; distinctive pyramid form. Good wildlife value. Age 100-150 years.
17. Oak, Northern Red *(Quercus rubra)*	60-80'	40-50'	M	☼ ◐	I	I	I	Withstands City conditions. Fast growth rate for oaks. Age 100-150 years.
18. Oak, Swamp White *(Quercus bicolor)*	40-60'	30-60'	M	☼ ◐	H	H	L	Quite adaptable. Unique bark. Holds leaves into winter. Very high wildlife value. Age 150-200 yrs.
19. Walnut, Black *(Juglans nigra)*	50-75'	50-70'	M	☼	I	I	H	Produces sizeable and edible fruit. Some plants may be sensitive being nearby. Age 150-175 yrs.

Native Coniferous (Evergreens)

Common Name (Latin)	At Maturity Height	At Maturity Spread	Growth Rate	Light Preference	Tolerance to: Salt	Tolerance to: Wet	Tolerance to: Drought	Comments
1. Cedar, Eastern Red *(Juniperus virginiana)*	45'	15-20'	S	☼ ◐ ●	I	I	H	Tolerates hot, dry sites; females produce blue fruits. Cones attract birds. Age 300 years.
2. Fir, Balsam *(Abies balsamea)*	50-75'	20-30'	S	☼ ◐	L	H	L	Withstands pollution. Fragrant needles. Age 100-150 years.
3. Hemlock, Emerald Fountain *(Tsuga Canadensis 'Monler')*	6-10'	2-3'	F	☼ ◐ ●	L	H	L	Shade tolerant.
4. Hemlock, Weeping *(Tsuga canadensis 'Sargentii')*	10-15'	6-8'	F	☼ ◐ ●	L	L	L	Prefers moist well drained acidic soil. Benefits from protection from winter winds.
5. Larch, American *(Larix laricina)*	40-70'	20-35'	M	☼	L	H	I	Also called Tamarack. Needles yellow in fall and drop off; small cones. Likes wet/boggy areas. Age 100-150 years.
6. Pine, Jack *(Pinus banksiana)*	20-50'	20-35'	M	☼	I	L	I	Unopened cones often gathered by squirrels in winter. Age 100-150 years.
7. Pine, Red *(Pinus resinosa)*	75-100'	35-55'	M	☼	I	L	H	Minnesota State Tree. Also called Norway Pine. Produces large cones. Age 150-200 years.
8. Spruce, Black *(Picea mariana)*	25-50'	10-12'	S	☼ ◐	H	H	L	Grows very upright. Age 150-200 years.

KEY: Growth Rate: F – Fast M- Moderate S- Slow

Light: ☼ Full Sun ◐ Part sun/part shade ● Shade

Tolerance: H – High I –Intermediate L – Low

Common Name (Latin)	At Maturity Height	At Maturity Spread	Growth Rate	Light Preference	Tolerance to: Salt	Tolerance to: Wet	Tolerance to: Drought	Comments
9. Spruce, Black Hill *(Picea glauca 'densata')*	30-50'	20-35'	S	☼ ◐	H	L	H	More dense and ornamental than other spruce.
10. Spruce, White *(Picea glauca)*	40-60'	12-20'	M	☼	H	L	H	Hardy; Needs full sun. Age 175-200 years.

Non-Native Plants

Deciduous – small

Common Name (Latin)	At Maturity Height	At Maturity Spread	Growth Rate	Light Preference	Tolerance to: Salt	Tolerance to: Wet	Tolerance to: Drought	Comments
1. Ash, European Mountain *(Sorbus aucuparia)*	20-25'	20-25'	M	☼	I	L	L	Showy white flowers; orange to red fruit. Age 25-50 years.
2. Birch, Fox Valley *(Betula nigra 'Little King')*	10'	12'	F	☼	I	H	L	In River Birch family. Very dense, compact growth. Most adaptable birch.
3. Chokecherry, Amur *(Prunus maackii)*	20-30'	18-25'	F	☼ ◐	L	L	L	Showy white flowers; attractive copper bark.
4. Crabapple *(Malus spp.)*	10-30'	8-20'	M	☼	L	I	I	White to pink flowers in spring. Choose cultivars with small, persistent fruit. Varieties are: 'PrairiFire', 'Donald Wyman', 'Sargent's' 'Purple Prince', 'Harvest Gold', 'Coralburst'.
5. Hydrangea, Tree Form *(Hydrangea paniculata 'Grandiflora')*	8-10'	6-10'	F	☼	H	I	L	White to pink flowers
6. Lilac, Dwarf Korean *(Syringa meyeri 'Palibin')*	6-8'	5-7'	F	☼	I	I	I	An excellent specimen tree for small areas.
7. Lilac, Japanese Tree *(Syringa reticulate)*	15-20'	12-15'	M	☼	I	I	I	Showy white flowers in summer.

KEY:

Growth Rate: F – Fast; M- Moderate; S- Slow

Light: ☼ Full Sun; ◐ Part sun/part shade; ● Shade

Tolerance: H – High; I –Intermediate; L – Low

Common Name (Latin)	At Maturity Height	At Maturity Spread	Growth Rate	Light Preference	Tolerance to: Salt	Tolerance to: Wet	Tolerance to: Drought	Comments
8. Lilac, Miss Kim *(Syringa patula)*	8-10'	10-15'	S	☼	I	L	I	Fragrant pink flowers. Burgundy fall color. If require smaller variety, consider 'Tinkerbelle' *(Syringa 'bailbelle') just 5-6' in height/width.*
9. Magnolia *(Magnolia acuminata)* *(Magnolia leobneri)*	8-30'	8-30'	M	☼ ◐	I	L	L	Fragrant flowers in April to May. Loebneri Magnolia runs taller - 'Merrill' variety has done well at the MN Landscape Arboretum.
10. Maple, Korean *(Acer Pseudosieboldianum)*	15-25'		M	☼	L	I	I	A hardy version of a Japanese maple. Exfoliating bark and reddish-gold fall color.
11. Maple, Tatarian *(Acer Tataricum)*	15-20'	15-20'	S to M	☼	L	L	H	Vivid orange to red fall color. Disease resistant.
12. Viburnum, Blackhaw *(Viburnum prunifolium)*	10-15'	8-12'	M	☼	L	H	I	White flower clusters, pink fruits turn black in fall. Red/bronze fall color.
13. Viburnum, Mohican *(Viburnum lantana 'Mohican')*	8'	8'	F	☼	L	H	I	Creamy white flowers. Orange/red fruit turns black in fall. Red fall color.
14. Willow, Arctic Blue Leaf *(Salix purpurea 'Nana')*	6-10'	3-6'	M	☼	I	H	I	Fine textured blue-green foliage

Deciduous - medium

Common Name (Latin)	At Maturity Height	At Maturity Spread	Growth Rate	Light Preference	Tolerance to: Salt	Tolerance to: Wet	Tolerance to: Drought	Comments
1. Pear, Ussurian *(Pyrus ussuriensis)*	25-35'	25-35'	M	☼	I	I	I	Showy spring flowers. Fruit inedible, but not present on solitary trees. Very hardy.
2. Redbud, Eastern *(Cercis Canadensis)*	20-30'	25-35'	M	☼	I	H	L	Reddish purple flower in spring. Age 50-75 years.
3. Showy Mountain Ash *(Sorbus decora)*	20-25'	20-35'	M	☼	I	I	H	White flowers. Showy red fruit clusters.
4. Willow, Laurel *(Salix pentandra)*	20-40'	15-35'	F	☼	I	H	I	Glossy, attractive dark green foliage. Age 20-40 years.
5. Yellowwood, American *(Cladrastis lutea)*	25-40'	20-35'	M	☼	I	M	L	Yellow fall leaf color. Clusters of fragrant white flowers.

KEY:

Growth Rate: F – Fast M- Moderate S- Slow

Light: ☼ Full Sun ◐ Part sun/part shade ● Shade

Tolerance: H – High I –Intermediate L – Low

Deciduous – tall

Common Name (Latin)	At Maturity Height	At Maturity Spread	Growth Rate	Light Preference	Tolerance to: Salt	Tolerance to: Wet	Tolerance to: Drought	Comments
1. Cork tree, Amur *(Phellodendrom spp.)*	30-50'	30-50'	F	☼	I	I	H	Interesting corky bark. Pollution tolerant, adaptable to wide range of soil types.
2. Elms, Hybrid *(Ulmus hybrids)*	40-60'	20-40'	F	☼ ◐ ●	I	I	H	Cultivars resistant to Dutch Elm disease: 'Accolade', 'New Horizon', Homestead', 'Discovery', and 'Cathedral'. Beneficial for butterflies.
3. Gingko *(Gingko biloba)*	40-60'	20-40'	S	☼	H	I	I	Attractive fan-shaped leaves; select male trees only. Age 100-150 years.
4. Maple, Autumn Blaze *(Acer x Freemanii)*	40-60'	40'	F	☼ ◐	L	H	H	Red fall color. Beneficial for butterflies.
5. Sassafras *(Sassafras albidum)*	30-60'	25-40'	M	☼ ◐	I	I	I	Provides wide range of fall colors. Aromatic foliage. Blue fruits attract birds.

Coniferous – small

Common Name (Latin)	At Maturity Height	At Maturity Spread	Growth Rate	Light Preference	Tolerance to: Salt	Tolerance to: Wet	Tolerance to: Drought	Comments
1. Arborvitae, Eastern *(Thuja occidentalis)*	10-15'	3-5'	M	☼	L	I	I	'Emerald' variety is narrow, compact, and pyramidal form. 'Nigra' variety is pyramidal. 'Techny' variety is also a strong grower.
2. Juniper, Chinese *(Juniperus chinensis)*	8-15'	6-12'	M	☼	I	L	H	Excellent evergreen foliage; females produce berry-like cones.
3. Larch, Deborah Waxman *(Larix laricina 'Deborah Waxman')*	6'	4'	F	☼	L	I	L	Dwarf form of American Larch. Blue-green needles turn golden yellow in fall.
4. Pine, Macopin *(Pinus strobes 'Macopin')*	8-10'	8-10'	S	☼	L	L	I	Dwarf form of white pine. Upright habit with large quantity of cones.
5. Pine, Mugho *(Pinus mugo)*	12-15'	12-15'	M	☼ ◐	L	L	H	Dense, wide-spreading form.

KEY:

Growth Rate: F – Fast; M- Moderate; S- Slow

Light: ☼ Full Sun; ◐ Part sun/part shade; ● Shade

Tolerance: H – High; I –Intermediate; L – Low

Common Name (Latin)	At Maturity		Growth Rate	Light Preference	Tolerance to:			Comments
	Height	Spread			Salt	Wet	Drought	
6. Pine, Slim Jim *(Pinus sylvestris 'Slim Jim')*	8-10'	4'	S	☼ ◐	L	L	H	Dense columnar form of Scotch Pine with twisted dark green needles.
7. Pine, Mugho *(Pinus mugo 'Tannenbaum')*	10-15'	6'	S	☼ ◐	L	L	H	Compact, pyramidal form with good winter color.
8. Spruce, Acrocona *(Picea abies 'Acrocona')*	8'	4'	S	☼ ◐	L	L	I	Compact & upright growth habit
9. Yew, Upright Japanese *(Taxus cuspidate 'Capitata')*	10-12'	3-5'	S	☼ ◐ ●	L	L	I	Prefers moist well drained soil. Shade tolerant. Needs protection from winter winds.

Coniferous – medium & tall

Common Name (Latin)	At Maturity		Growth Rate	Light Preference	Tolerance to:			Comments
	Height	Spread			Salt	Wet	Drought	
1. Fir, White *(Abies concolor)*	30-50'	15-25'	M	☼ ◐	I	I	I	Soft, evergreen foliage; excellent pyramidal form.
2. Pine, Austrian *(Pinus nigra)*	40-60'	25-40'	M	☼ ◐	H	L	I	Transplants well and is hardy. Dark green, stiff needles. Age 100+ years.
3. Pine, Scotch *(Pinus sylvestris)*	30-50'	25-40'	M	☼ ◐	L	L	H	Attractive orange bark. Age 100-150 years.
4. Pine, Swiss Stone *(Pinus cembra)*	25-35'	10-15'	S	☼	L	L	I	Dense, conical growth form; dark green foliage.
5. Spruce, Norway *(Picea abies)*	40-65'	20-35'	F	☼	L	L	I	Produces larges cones of any spruce. Age 150-200 years.

KEY:

Growth Rate: F – Fast; M- Moderate; S- Slow

Light: ☼ Full Sun; ◐ Part sun/part shade; ● Shade

Tolerance: H – High; I –Intermediate; L – Low

City of Maple Grove

Power and Phone Company Boundaries

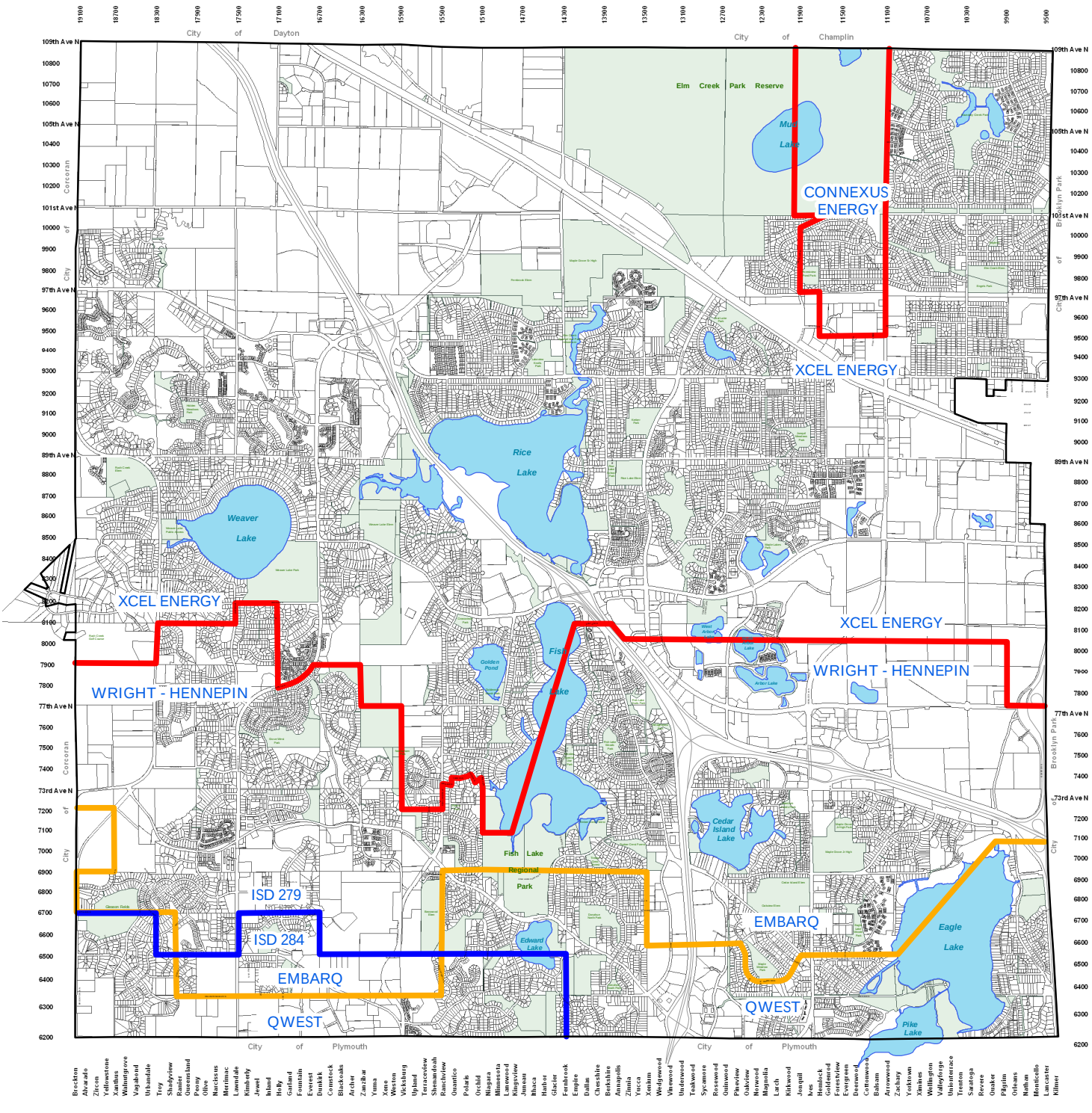

ELECTRICAL SERVICE
COMMUNICATION SERVICE
SCHOOL DISTRICTS

N

0 0.1 0.2 0.4 0.6 0.8 Miles

CITY OF MAPLE GROVE
UTILITY COMPANY CONTACTS

You are requested to contact, as soon as possible, the appropriate utility company serving your development area to initiate the process to provide the necessary utilities to serve your proposed development.

GAS

CenterPoint Energy Minnegasco	612-372-4727 612-372-5050(after hours) www.centerpointenergy.com	800 LaSalle Ave, P O Box 59038 Minneapolis MN 55402

ELECTRIC

Xcel Energy	1-800-895-4999 1-800-895-1999(after hours) www.xcelenergy.com	3115 Centre Point Dr Roseville MN 55113
Wright-Hennepin Electric	763-477-3000 763-477-3100(after hours) www.whe.org	P O Box 330 Rockford MN 55373-0330
Connexus Energy	763-323-2600 1-800-642-1672 www.connexusenergy.com	14601 Ramsey Blvd P O Box 279, Anoka MN 55303

TELEPHONE

Embarq & High Speed Internet	1-800-788-3500 www.embarq.com	343-82nd St., Chaska MN 55318
Qwest & High Speed Internet	-1-800-244-1111-Res. 1-800-603-6000-Bus www.qwest.com	

CABLE

Comcast	651-222-3333 www.comcast.com	10 Riverpark Plaza St. Paul MN 55107

GOPHER STATE ONE CALL Maple Grove Caller ID#2549
651-454-0002 or 1-800-252-1166
www.gopherstateonecall.org

CITY OF MAPLE GROVE 2016 PLANNING COMMISSION SUBMISSION DATES

Submission Deadline (DATE is FIRM)	Planning Commission Meeting Dates	City Council Meeting Dates	Osseo-MG Press PH Notice Deadline	Residential Mailing Deadline
December 14, 2015 December 28, 2015	January 11, 2016 January 25, 2016	*Tues., January 19, 2016 February 1, 2016	December 24, 2015 January 7, 2016	December 31, 2015 January 15, 2016
January 11, 2016 February 1, 2016	February 8, 2016 February 29, 2016	*****Tues., February 16, 2016 March 7, 2016	January 21, 2016 February 11, 2016	January 29, 2016 February 19, 2016
*Tues., February 16, 2016 February 29, 2016	March 14, 2016 March 28, 2016	March 21, 2016 April 4, 2016	February 25, 2016 March 10, 2016	March 4, 2016 March 18, 2016
March 14, 2016 March 28, 2016	April 11, 2016 April 25, 2016	April 18, 2016 May 2, 2016	March 24, 2016 April 7, 2016	April 1, 2016 April 15, 2016
April 11, 2016 May 2, 2016	May 9, 2016 *****Tues., May 31, 2016	May 16, 2016 June 6, 2016	April 21, 2016 May 12, 2016	April 29, 2016 May 20, 2016
May 16, 2016 *Tues., May 31, 2016	June 13, 2016 June 27, 2016	June 20, 2016 *Tues., July 5, 2016	May 26, 2016 June 9, 2016	June 3, 2016 June 17, 2016
June 13, 2016 June 27, 2016	July 11, 2016 July 25, 2016	July 18, 2016 August 1, 2016	June 23, 2016 July 7, 2016	July 1, 2016 July 15, 2016
July 11, 2016 August 1, 2016	August 8, 2016 August 29, 2016	August 15, 2016 *****Tues., Sept. 6, 2016	July 21, 2016 August 11, 2016	July 29, 2016 August 19, 2016
August 15, 2016 August 29, 2016	September 12, 2016 September 26, 2016	September 19, 2016 October 3, 2016	August 25, 2016 September 8, 2016	September 2, 2016 September 16, 2016
September 12, 2016 October 3, 2016	October 10, 2016 October 31, 2016	October 17, 2016 November 7, 2016	September 22, 2016 October 13, 2016	September 30, 2016 October 21, 2016
October 17, 2016 October 31, 2016	November 14, 2016 November 28, 2016	November 21, 2016 December 5, 2016	October 27, 2016 November 10, 2016	November 4, 2016 November 18, 2016
November 14, 2016	December 12, 2016	December 19, 2016	November 23, 2016	December 2, 2016

Planning Commission meetings are held on the 2nd and last Mondays of the month at **7:00 p.m.** unless a holiday falls on a Monday, then it would be held on the following Tuesday. After the Planning Commission makes its recommendation, (unless it is tabled) the item will be scheduled on the next available City Council meeting for their action.