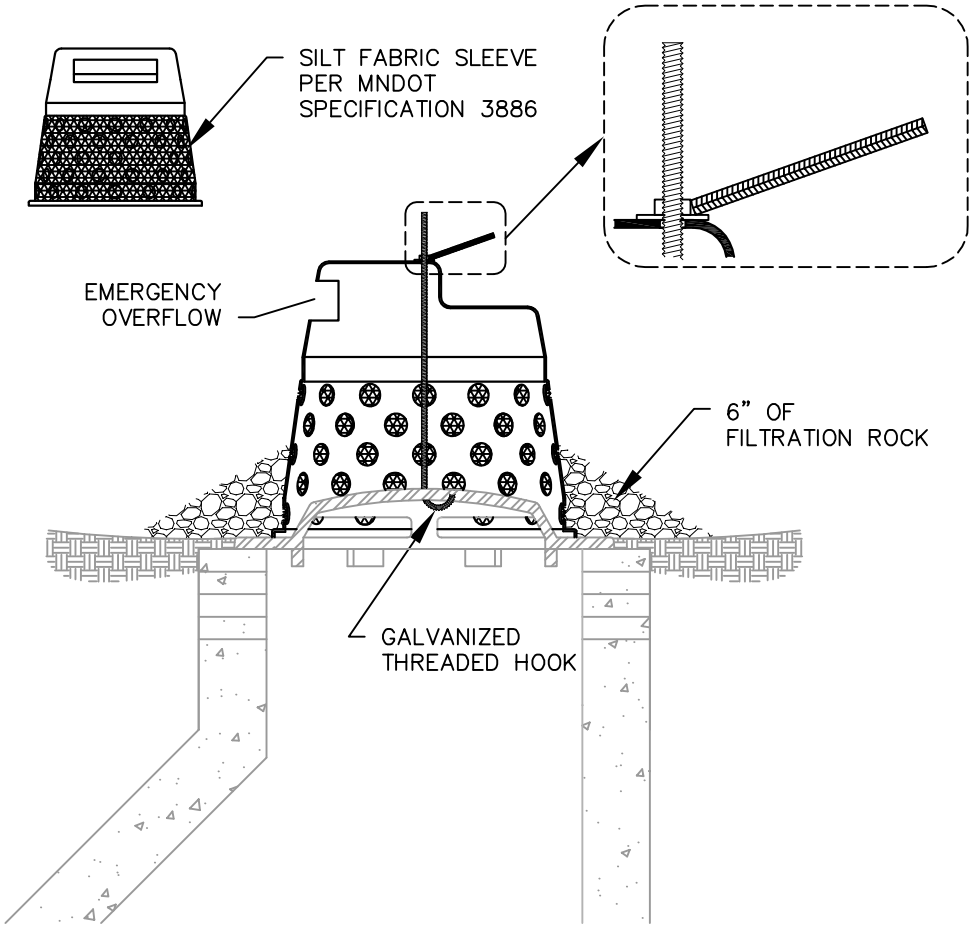

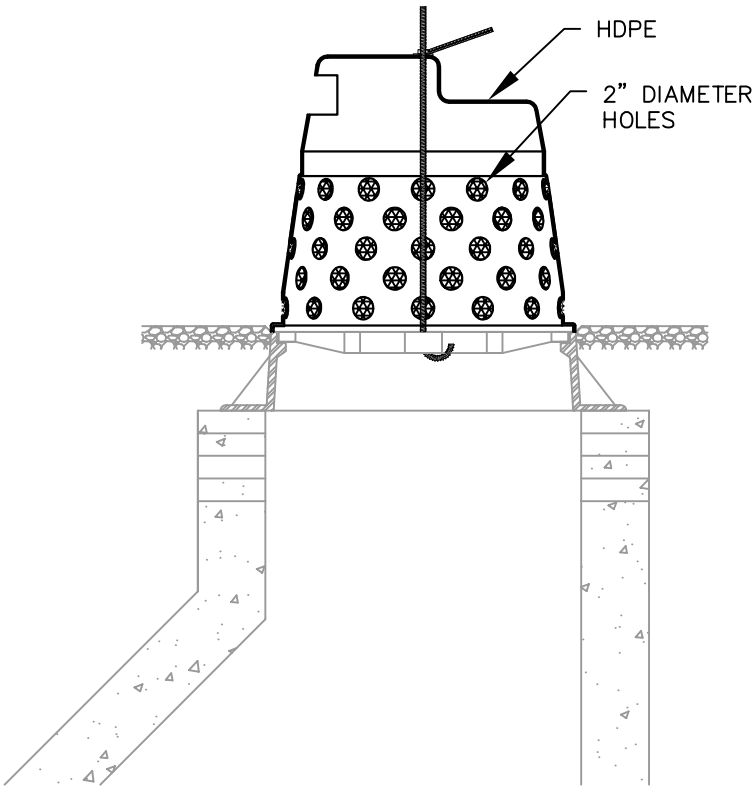

NOTE:
DEVICES TO BE INSTALLED IMMEDIATELY UPON INSTALLATION OF CONCRETE STRUCTURE CONE OR TOP SLAB. CASTING ASSEMBLY MUST ALSO BE AT LEAST TEMPORARILY IN PLACE.

City of Maple Grove	INFRASAFE - SEDIMENT CONTROL BARRIER	STANDARD PLATE # EROS-20
LAST REVISION NOVEMBER 2014	CITY OF MAPLE GROVE ENGINEERING & PUBLIC WORKS DEPARTMENTS	