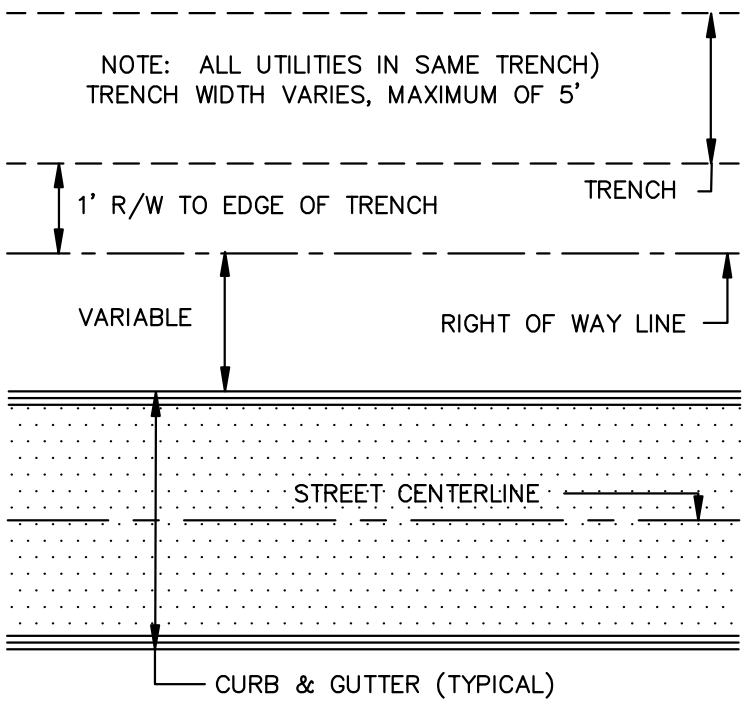

TYPICAL PRIVATE UTILITY PLACEMENT

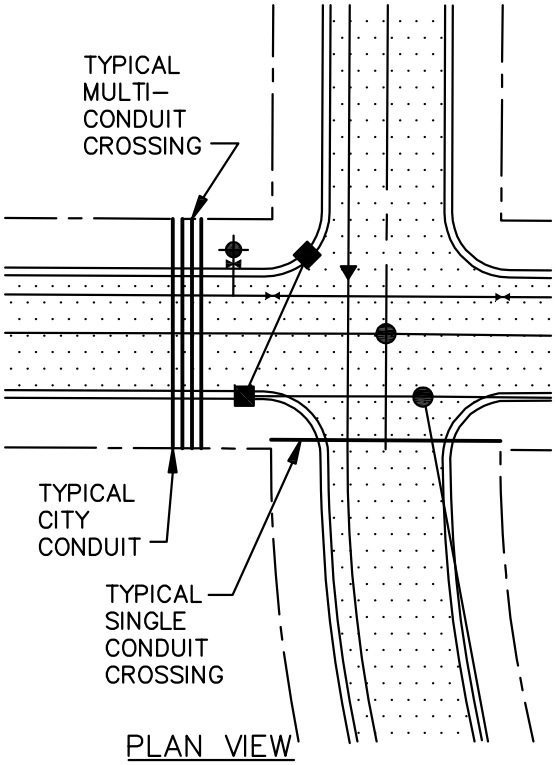

PLAN VIEW

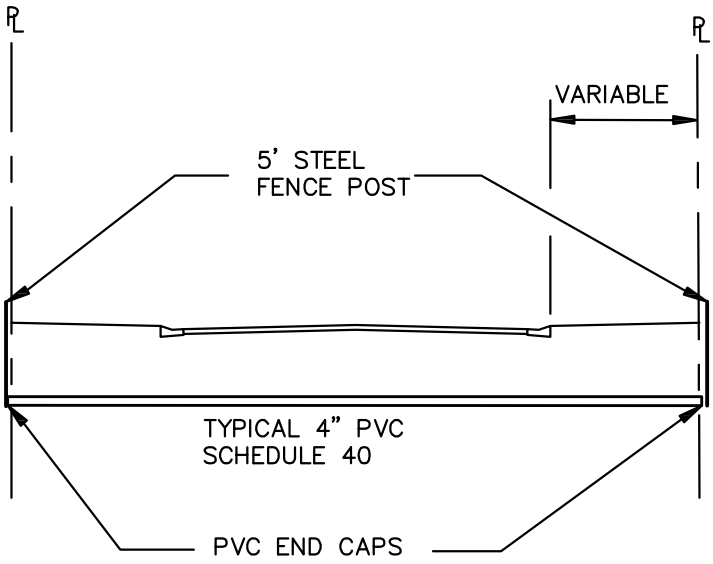

CROSS SECTION

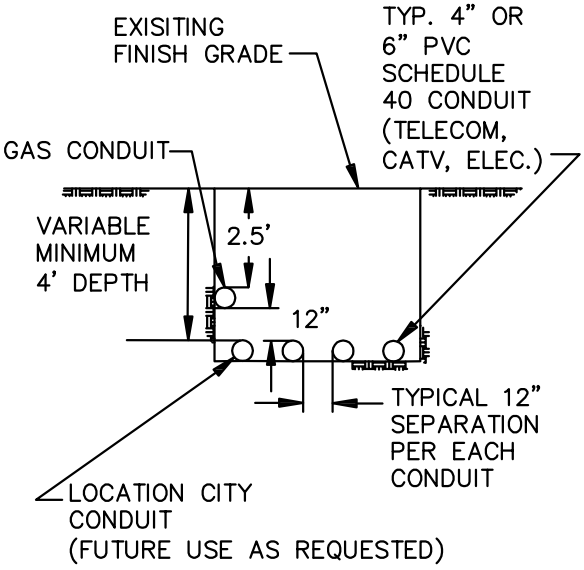

TRENCH CROSS SECTION AT CONDUIT CROSSING

City of Maple Grove

LAST REVISION
MARCH 2017

PRIVATE UTILITY CONDUIT CROSSING

CITY OF MAPLE GROVE ENGINEERING & PUBLIC WORKS DEPARTMENTS

STANDARD PLATE # STR-10